Nederman

IMPROVING YOUR WORKSPACE

# REGISTER YOUR BINDER AT:

## www.nedermanusa.com/html/catreg.html

**New information will be added and old information revised. Be sure you have the latest information. Our registration database is used only to notify you of literature updates. We don't share it! We don't send junk mail!**

Nederman

IMPROVING YOUR WORKSPACE

# BENCHTOP SALES BINDER

**Tab 1** **Extraction Arms Brochure**
**Complete Extractor Kits Brochure**

**Tab 2** **BT2 Arm Standard**
Technical Data
Performance Data
Dimensional Data
Accessories

**Tab 3** **BT2 Arm Chemical Resistant**
Technical Data
Performance Data
Dimensional Data
Accessories

**Tab 4** **BT2 Arm ESD**
Technical Data
Performance Data
Dimensional Data
Accessories

**Tab 5** **Extractor Kit 500**
Technical Data
Performance Data
Accessories
Spare Parts

**Extractor Kit 500 ESD**
Technical Data
Performance Data
Accessories
Spare Parts

**Tab 6** **Extractor Kit 1000**
Technical Data
Performance Data
Accessories
Spare Parts

**Extractor Kit 1000 ESD**
Technical Data
Performance Data
Accessories
Spare Parts

**Tab 7** **Extractor Kit 1500**

Technical Data
Performance Data
Accessories
Spare Parts

**Extractor Kit 1500 ESD**

Technical Data
Performance Data
Accessories
Spare Parts

**Tab 8** **Extractor Kit 2000**

Technical Data
Performance Data
Accessories
Spare Parts

**Extractor Kit 2000 ESD**

Technical Data
Performance Data
Accessories
Spare Parts

**Tab 9** **Extractor Kit 2500**

Technical Data
Performance Data
Accessories
Spare Parts

**Extractor Kit 2500 ESD**

Technical Data
Performance Data
Accessories
Spare Parts

**Tab 10** **Extractor Kit 3000**
Technical Data
Performance Data
Accessories
Spare Parts

**Extractor Kit 3000 ESD**
Technical Data
Performance Data
Accessories
Spare Parts

Tab1

Nederman

IMPROVING YOUR WORKSPACE

# BenchTop Extraction Arms with unbeatable flexibility

# A new generation of BenchTop extraction arms with unbeatable flexibility

Nederman introduces a new generation of BenchTop arms - the FX50, FX75 and FX100. These arms represent state-of-the-art technology based on Nederman's extensive experience of creating solutions to provide safe and clean working environments.

The arms are made of anodized aluminium tubing with polypropene joints, offering strength and durability combined with light and easy handling. They are especially suitable for applications where small, flexible and easy-to-use arms are required to eliminate smoke, gases, dust and particles. For example, when soldering and gluing or handling solvents and noxious substances. Nederman BenchTop arms are designed to provide many years of trouble-free operation.

## Industrial, research and educational applications

BenchTop arms offer perfect solutions for numerous types of workplaces. These can be found, for example, in:

- *Chemical and pharmaceutical plants*
- *Electronics assembly factories*
- *Research laboratories*
- *School chemistry laboratories and technical workshops*

For quick installation there is a range of self-assembly kits, complete with fans and filters. For more advanced applications we can provide customized solutions to meet specific requirements.

## Ceiling, wall, floor or bench mounting

The multi-purpose mounting bracket allows complete freedom when planning installation points for the arms. They can be mounted on ceilings, walls and floors or fixed to tabletops.

## Unique maneuverability

The two outermost joints in the arm can rotate and swivel through 360°. This provides unique directional flexibility and makes it possible to position the hood exactly where required. Once positioned, the hood can be locked in place using two friction devices in the arm joints.

## Designed for optimal efficiency and low noise

Computerized simulations were used in the development of this new series of extractors to create arms with optimal airflow and dust conveying characteristics. The improved airflow results in smaller, more efficient fans. Another benefit is the reduced noise level. Depending on the airflow, this means a reduction of about 5dB, or more, when compared with similar arms on the market.

## Mounting options

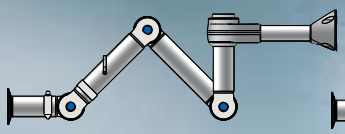

*Wall mounting*
*Connection up*

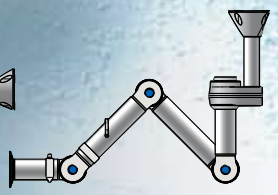

*Ceiling mounting*
*Connection up*

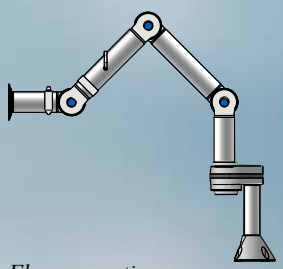

*Floor mounting*
*Connection down*

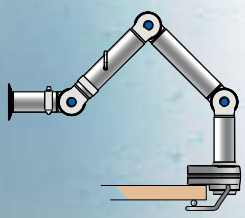

*Bench mounting*
*Connection down*

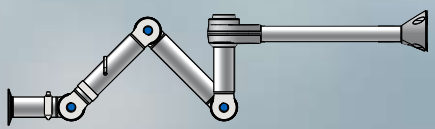

*The arm's reach can be increased by using an extension profile. This means that one arm can be used by a number of adjoining work stations.*

# Arms for every application

The Nederman BenchTop arms can be used in every type of environment, ranging from assembly stations, where solder fumes are extracted, to laboratories, where protection against highly corrosive or noxious gases is vital.
Three different BenchTop arm models have been developed to cover a wide spectrum of needs:

**The ORIGINAL model** is a robust and reliable all-round arm for general applications where there is little risk of electrical discharges or attack by aggressive chemicals. The arm is shown fitted with a multi-purpose transparent hood.

**The ESD/EX model** is designed for use in electronic environments where there is a risk of electrostatic discharges. Following risk assessment, the ESD/EX can also be used for certain applications in explosive environments. The arm is made of conductive materials, eliminating the risk of static electricity and sparks. The hood is made of anodized metal.

**The CHEM model** has profiles made of double anodized aluminium. The arm is ideal for fume extraction in aggressive environments where corrosion resistance must be assured. The arm shown here is fitted with a painted, corrosion-resistant metal hood.

*Metal hood*

*Multi-purpose hood*

## Universal mini hood and interface

Nederman BenchTop arms are supplied with a mini hood as standard – no extra extraction nozzle is required. The mini hood is also a universal interface for connecting to other hoods. A metal hood or transparent multi-purpose hood can be attached directly to the mini hood, regardless of arm size.

The optional multi-purpose hood can be used both as a dome and a screen hood. It has excellent screening properties, is fully transparent and does not cause optical distortions. The hood can be easily angled to suit any extraction situation.

# Full range

## FX100

## FX75

## FX50

*The new generation of Nederman BenchTop arms are available in 2, 3 and 4 in. versions with corresponding capacity ranges of FX50: 24-53 cfm, FX75: 41-104 cfm and FX100: 118-294 cfm.*

## FX32

*For low-volume bench top extraction purposes there is a compact 1 1/4" version, consisting of a one-piece, self-supporting, flexible arm.*

# From self-assembly kits to tailor-made solutions

Nederman BenchTop arms are available in self-assembly kits, which include a fan and filter, a fan speed controller, hoses, table bracket and connectors. The kit provides a quick and convenient solution for creating a fume-free workplace. Six different extraction kits are available.

For more information see the separate kit brochure or visit our website.

At Nederman we have both the products and the experience required to create customized extraction solutions, large or small. Our team of designers and engineers will help you construct a solution uniquely suited to your particular requirements. Our support services assist in every step – from consultation and design to installation and after sales service. Our design services are supported by full CAD facilities.

*Our self-assembly kits include everything you need.*

*Nederman has a complete range of fans and filters for every size of extraction system.*

# Product range

**Extraction Arms**

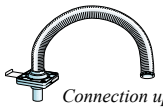

*Connection up/down 1 1/4”*

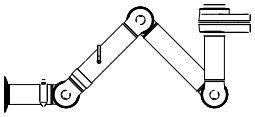

*Connection up 2”, 3”,4”*

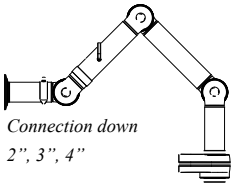

*Connection down 2”, 3”, 4”*

| Connection direction* | Diameter (in) | Diameter (mm) | Length (in) | Length (mm) | ORIGINAL Part No. | ESD/EX Part No. | CHEM Part No. |
|---|---|---|---|---|---|---|---|
| Up/Down | 1 1/4” | 32 | 39” | 1000 | 70502834 | 70502934 | - |
| Up/Down | 2” | 50 | 28” | 700 | 70510144 | 70530144 | - |
| Down | 2” | 50 | 44” | 1100 | 70510244 | 70530244 | - |
| Down | 2” | 50 | 60” | 1500 | 70510444 | 70530444 | - |
| Up | 2” | 50 | 44” | 1100 | 70510344 | 70530344 | - |
| Up | 2” | 50 | 60” | 1500 | 70510544 | 70530544 | - |
| Down | 3” | 75 | 44” | 1100 | 70540144 | 70560144 | 70550144 |
| Down | 3” | 75 | 60” | 1500 | 70540344 | 70560344 | 70550344 |
| Up | 3” | 75 | 44” | 1100 | 70540244 | 70560244 | 70550244 |
| Up | 3” | 75 | 60” | 1500 | 70540444 | 70560444 | 70550444 |
| Up/Down | 4” | 100 | 48” | 1200 | 70570144 | 70590144 | 70580144 |
| Down | 4” | 100 | 72” | 1800 | 70570244 | 70590244 | 70580244 |
| Up | 4” | 100 | 72” | 1800 | 70570344 | 70590344 | 70580344 |
| Up | 4” | 100 | 96” | 2400 | 70570544 | 70590544 | 70580544 |

** Note: Different spring mechanisms are fitted depending on connection direction*

*Table / Wall brackets 1 1/4”*

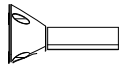

*Bracket complete*

*Bracket*

*Extension profile*

*Table bracket*

| Accessories | Diameter (in / mm) | Diameter (mm) | Length (in) | Length (mm) | ORIGINAL Part No. | ESD/EX Part No. | CHEM Part No. |
|---|---|---|---|---|---|---|---|
| Table bracket | 1 1/4” | 32 | | | 70371761 | 70371761 | - |
| Wall bracket | 1 1/4” | 32 | | | 70371760 | 70371760 | - |
| Bracket complete | 2” / 3” / 4” | 50 / 75 / 100 | 10” | 250 | 70501144 | 70501144 | 70501144 |
| Bracket | 2” / 3” / 4” | 50 / 75 / 100 | | | 70501244 | 70501244 | 70501244 |
| Extension profile | 2” / 3” / 4” | 50 / 75 / 100 | 44” | 1100 | 70501344 | 70501344 | 70501344 |
| Table bracket | 2” / 3” / 4” | 50 / 75 / 100 | | | 70501444 | 70501444 | 70501444 |

*Flangehood*

*Dome hood 1/2*

*Dome hood 1/1*



*Metal hood*

*Multi-purpose hood*

| Hoods | Diameter (in / mm) | Diameter (mm) | Size (in) | Size (mm) | ORIGINAL Part No. | ESD/EX Part No. | CHEM Part No. |
|---|---|---|---|---|---|---|---|
| Flange hood | 1 1/4” | 32 | 6x6 | 150x160 | 70371525 | - | - |
| Dome hood 1/2 | 1 1/4” | 32 | 10x5 | 260x120 | 70371756 | 70371807 | - |
| Dome hood 1/1 | 1 1/4” | 32 | 10 | Ø260 | 70371757 | 70371808 | - |
| Metal hood | 2” / 3” / 4” | 50 / 75 / 100 | 11 | Ø280 | 70500444 | 70500544 | 70500444 |
| Multi-purpose hood | 2” / 3” / 4” | 50 / 75 / 100 | 15x18 | 380x460 | 70500144 | 70500244 | 70500344 |

*Reducer 4¼ x 2½” Reducer 4¼ x 3-3⅛” Reducer 4¼ x 6” Reducer 4¼ x 5”*

| | | | | | | | |
|---|---|---|---|---|---|---|---|
| Reducers | 2 1/2” | 63 | | | 70500644 | 70500644 | 70500644 |
| Reducers | 3” - 3 1/4” | 75 - 80 | | | 70500744 | 70500744 | 70500744 |
| Reducers | 4” | 100 | | | 70500844 | 70500844 | 70500844 |
| Reducers | 5” | 125 | | | 70500944 | 70500944 | 70500944 |

*Hoses white/grey 1 3/4”, 3”, 4”, 5”*

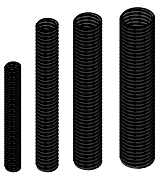

*Hoses ESD/EX 1 3/4”, 3”, 4”, 5”*

| | | | | | | | |
|---|---|---|---|---|---|---|---|
| Hose (white) | 1 3/4” | 45 | 120” | 3000 | 70501644 | - | - |
| Hose (grey) | 3” | 75 | 120” | 3000 | 70501544 | - | - |
| Hose (grey) | 4” | 100 | 120” | 3000 | 70501744 | - | - |
| Hose (grey) | 5” | 125 | 197” | 5000 | 70501844 | - | - |
| Hose ESD/EX (black) | 1 3/4 | 45 | 120” | 3000 | - | 70502044 | - |
| Hose ESD/EX (black) | 3” | 75 | 120” | 3000 | - | 70501944 | - |
| Hose ESD/EX (black) | 4” | 100 | 120” | 3000 | - | 70502144 | - |
| Hose ESD/EX (black) | 5” | 125 | 120” | 3000 | - | 70502244 | - |
| Hose (black) | 1 1/4” | 32 | 60” | 1500 | 70400052 | - | - |
| Cover ring | | | | | 70501044 | - | 70501044 |

wendelbo.com

# Nederman solutions for optimal working environment

Health and safety is central to our ethos – to advise customers and work with them to develop solutions and products to improve their workspace and efficiency. Dedicating 60 years to improving the industrial workplace, Nederman has become the world leader in fume and dust extraction equipment and self-retracting hose and cable reels.

## Extraction arms

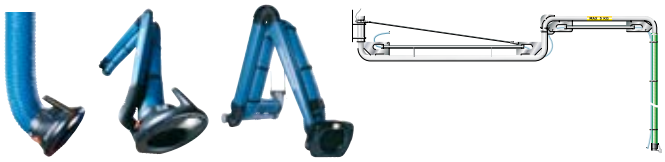

## Exhaust Extraction Systems

## Fans

## Filters

## Central/fixed filter units

## Portable and mobile filter units

## Cleaning equipment

## Hose and Cable Reels

Nederman

**Nederman Inc.**
39115 Warren Road, Westland, MI 48185
Telephone: (734) 729-3344 Fax: (734) 729-3358
Toll Free: (800) 575-0609 Fax: (888) 729-3358
**www.nedermanusa.com**

**Nederman is represented in:**
Australia, Austria, Bahrain, Belgium, Brazil, Bulgaria, Canada, China, the Czech Republic, Cyprus, Denmark, Egypt, Estonia, Finland, France, Germany, Greece, Hong Kong, Hungary, Iceland, India, Iran, Ireland, Italy, Japan, Korea, Latvia, Lithuania, Malaysia, the Netherlands, Norway, Philippines, Poland, Portugal, Romania, Russia, Saudi Arabia, Serbia & Montenegro, Singapore, Slovenia, South Africa, Spain, Sweden, Switzerland, Taiwan R.O.C., Thailand, Turkey, United Arab Emirates, United Kingdom, USA.

988006140

Nederman

IMPROVING YOUR WORKSPACE

# Complete Extraction Kits

## For Capturing and Filtering Fumes and Gases

The **Extractor Kit 500** captures the noxious fumes and gases that normally occur when soldering, gluing, and working with solvents.

Unit comes supplied with a FX32 (1 1/4”) extraction arm . The arm has a full 360° swivel at its base, and will hold its position in all directions. A tight sealing damper, located at the base of the arm, can regulate the airflow of the arm.

Kit 500 is also available in an ESD version.

***Kit Includes: Arm, table bracket, CX5500 filter and fan.***

The **Extractor Kit 1000** enables two, simultaneous users to capture and filter the noxious fumes that normally occur when soldering, gluing, and working with solvents.

The fan comes with a variable speed controller, which regulates the amount of airflow through the system. Unit comes supplied with two FX32 (1 1/4”) extraction arms. The arms have a full 360° swivel at their base, and will hold their positions in all directions. A damper located in the base of the arms, can also regulate the airflow in both arms.

The Extractor Kit 1000 is also available in an ESD version.

***Kit Includes: Arms, clear dome hood, table brackets, standard filter, fan and fan speed controller.***

The **Extractor Kit 1500** allows three users to work in small workstations simultaneously.

A variable speed controller controls the speed of the fan remotely. Correct airflow can therefore easily be set to fit different applications.

A tight sealing damper, located at the base of the arm, can regulate the airflow of the arm. The extraction hood supplied with the kit improves the capture velocity for heavy and light gases.

The Extractor Kit 1500 is also available in an ESD version.

***Kit Includes: Arms, clear dome hood, table brackets, standard filter, fan and fan speed controller.***

The **Extractor Kit 2000** offers a complete filtration solution with different capture possibilities. The hood allows the user to capture the contaminants at the source. Ideal for soldering, gluing, or working with solvents.

The BT2 (2”) arm is over 3’ long. Proper airflow can easily be set to fit the right application. The air is filtered through a high efficiency particle/gas filter. The filter captures the noxious fumes and gases that normally occur. The filter is disposable and the replacement is made dust free. Standard filter is supplied , optional all-carbon filter available.

The Extractor Kit 2000 is also available in an ESD version.

***Kit Includes: Arm, swivel, table bracket, standard filter , clear multi-purpose hood, fan, and fan speed controller***

The **Extractor Kit 2500** is a flexible system for capture of noxious fumes and gases that occur when soldering, gluing, or dealing with solvents.

The **Extractor Kit 2500** comes supplied with two BT2 (2”) arms. The arms come supplied with damper for adjusting airflow to fit various applications. The arms can be used independently from each other, due to the variable speed of the fan and dampers in the arms. Standard filter is supplied, optional all-carbon filter available

The Extractor Kit 2500 is also available in an ESD version.

***Kit Includes: Arms, swivels, table brackets, standard filter , fan, and fan speed controller.***

The **Extractor Kit 3000** is quickly installed and creates a workspace where fumes and gases are efficiently captured.

The BT2 (3”) extraction arm comes supplied with damper for adjusting airflow to fit various applications The filter is disposable and the replacement is made dust free. Standard filter is supplied, optional all-carbon filter available.

The Extractor Kit 3000 is also available in an ESD version.

***Kit Includes: Arm, swivel, table bracket, standard filter, fan, and fan speed controller.***

# Product Range

These are just some examples of our extensive range of products and systems.
To get the complete picture you are welcome to visit: www.nedermanusa.com

### Extraction Arms

### Exhaust Extraction Systems

### Fans

### Filters

### Central/Fixed Filter Units

### Portable and Mobile Filter Units

### Cleaning Equipment

### Hose and Cable Reels

Nederman

**Nederman, Inc.**
39115 Warren Road
Westland, Michigan 48185
Toll Free: (800) 575-0609 Fax: (888) 729-3358
Telephone: (734) 729-3344 Fax: (734) 729-3358
Email: Info@nedermanusa.com

**www.nedermanusa.com**


**Nederman is represented in:**
Australia, Austria, Bahrain, Belgium, Brazil, Bulgaria, Canada, China, the Czech Republic, Cyprus, Denmark, Egypt, Estonia, Finland, France, Germany, Greece, Hong Kong, Hungary, Iceland, India, Iran, Ireland, Italy, Japan, Korea, Latvia, Lithuania, Malaysia, the Netherlands, Norway, Philippines, Poland, Portugal, Romania, Russia, Saudi Arabia, Serbia & Montenegro, Singapore, Slovenia, South Africa, Spain, Sweden, Switzerland, Taiwan R.O.C., Thailand, Turkey, United Arab Emirates, United Kingdom, USA.

No. 988003100 2006-02

# Tab 2

| | | |
|---|---|---|
| Nederman<br>IMPROVING YOUR WORKSPACE<br>39115 Warren<br>Westland, Michigan<br>Telephone: (734) 729-3344<br>Fax:(734) 729-3358<br>www.nedermanusa.com | TECHNICAL DATA<br>**Revision: 20070111** | DATE<br>PROJECT<br>LOCATION |
| | **BT2 Standard**<br>**2", 3", 4"** | ARCH/ENG<br>REP. NAME |

**General Description:** Common use in Industrial, Research, Laboratory, Electronics, Institutional applications and more, where precision "spot extraction" is required with low air volumes and especially quiet operations are needed. The arm is designed with state-of-the-art multi-joint maneuverability allowing the operator almost unlimited positioning while maintaining an extraordinarily user-friendliness during the handling of the arm.

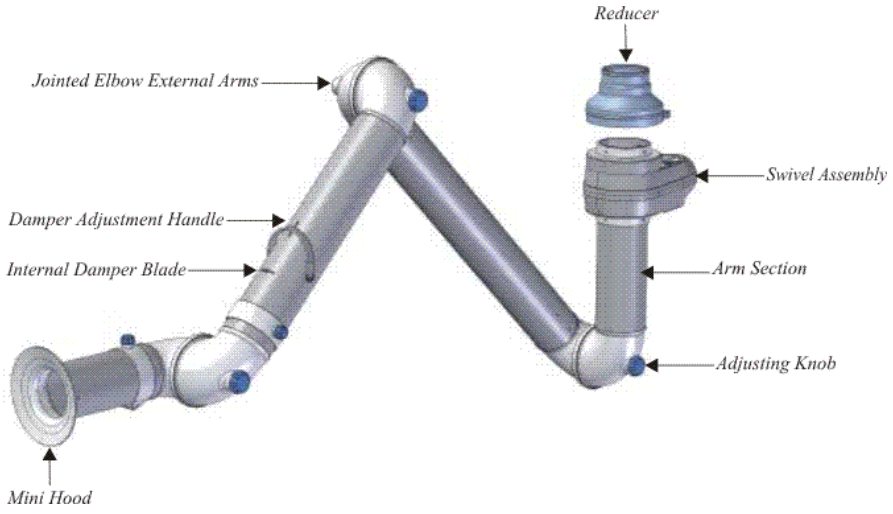


| COMPONENT | DESCRIPTION and/or MATERIAL |
|---|---|
| **ARM SECTIONS** | Thin-walled anodized (anodization 10 microns) aluminum with an excellent corrosion resistance against solvents, cleaners, TIG welding fumes, soldering fumes, adhesives & gluing fumes. |
| **SWIVEL ASSEMBLY** | Hi-grade cast aluminum with 360 degree rotation. |
| **JOINTED ELBOWS** | Polypropylene with glass fiber reinforcements and knurled adjusting knobs on the friction joints are supported by ball bearings. Certain sizes incorporate an internal spring support. |
| **EXTERNAL RINGS** | Polypropylene with glass fiber reinforcements. |
| **AXIAL LOCKING RINGS** | Polypropylene with glass fiber reinforcements. |
| **ADJUSTING KNOBS** | Polypropylene with glass fiber reinforcements. Screws into galvanized steel. |
| **THREADED SHAFT INSIDE JOINTS** | Stainless Steel. |
| **DAMPER BLADE** | Thermo Plastic Elastomer |
| **DAMPER ADJUSTMENT HANDLE** | Aluminum anodized 10 microns. |
| **INTERNAL SPRING** | Stainless Steel |
| **SWIVEL BEARINGS** | Polypropylene with glass fiber reinforcements. |
| **SWIVEL** | Aluminum |
| **RIVETS** | Aluminum |
| **MINI HOOD** | Standard component at the end of the arm, made of polypropylene. |

Nederman
IMPROVING YOUR WORKSPACE
39115 Warren
Westland, Michigan
Telephone: (734) 729-3344
Fax:(734) 729-3358
www.nedermanusa.com

# PERFORMANCE DATA

**Revision: 20070111**

**BT2 Standard**

**2”, 3”, 4”**

| | |
|---|---|
| DATE | |
| PROJECT | |
| LOCATION | |
| ARCH/ENG | |
| REP. NAME | |

## Sound level

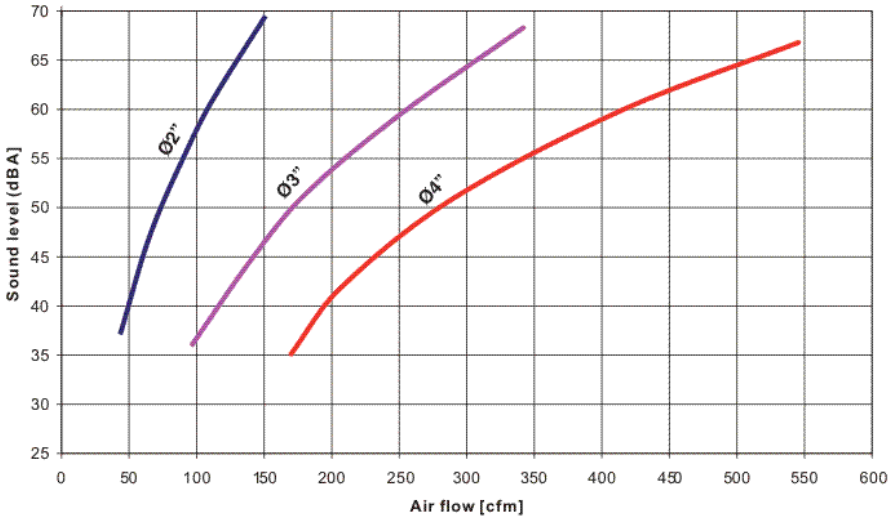

Position of arms when measured

## Pressure drop

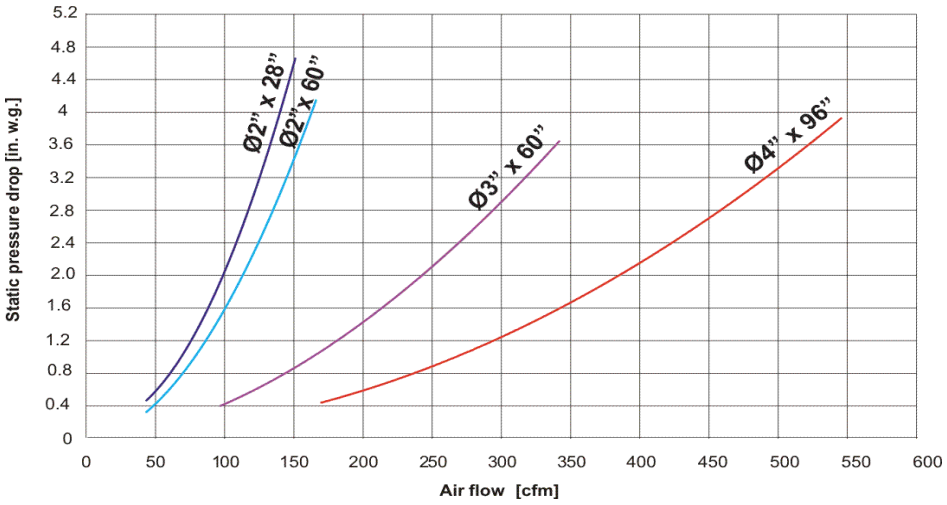


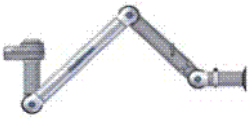

Position of arms when measured

| Recommended airflow [cfm] | |
|---|---|
| Ø 2” | 25-100 |
| Ø 3” | 50-150 |
| Ø 4” | 100-300 |

Nederman
IMPROVING YOUR WORKSPACE

39115 Warren
Westland, Michigan
Telephone: (734) 729-3344
Fax:(734) 729-3358
www.nedermanusa.com

# DIMENSIONAL DATA

**Revision: 20070111**

## BT2 Standard

## 2”, 3”, 4”

DATE

PROJECT

LOCATION

ARCH/ENG

REP. NAME

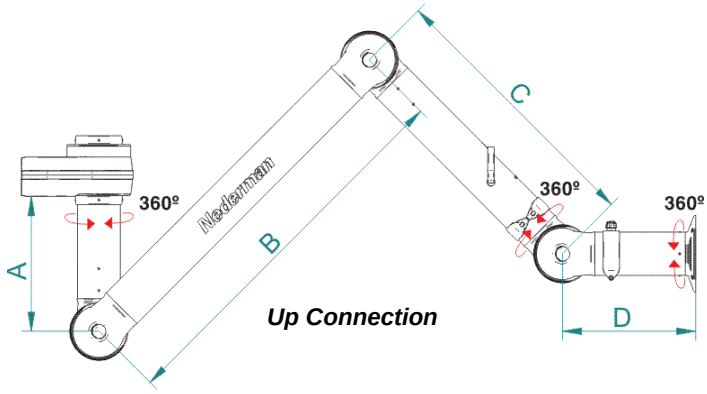


***Up Connection***

***Down Connection***

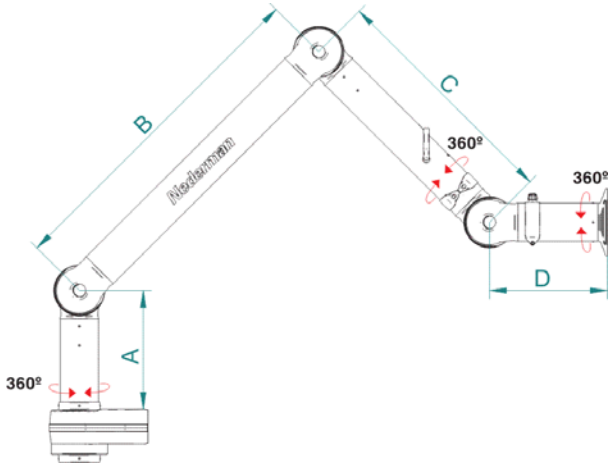


Dimensional Data

| Part No. | Diameter (in.) | Mounting Type | A (in.) | B (in.) | C (in.) | D (in.) | Length (in.) | Weight (lb) |
|---|---|---|---|---|---|---|---|---|
| 70510244 | 2 | Bench, Floor | 10 | 16 | 16 | 9 | 44 | 5 |
| 70510444 | 2 | Bench, Floor | 10 | 28 | 20 | 9 | 60 | 6 |
| 70540144 | 3 | Bench, Floor | 10 | 16 | 17 | 10 | 44 | 7 |
| 70540344 | 3 | Bench, Floor | 10 | 28 | 20 | 10 | 66 | 8 |
| 70570244 | 4 | Bench, Floor | 13 | 30 | 30 | 11 | 72 | 13 |
| 70510144 | 2 | ALL | 10 | 17 | 9 | - | 28 | 4 |
| 70570144 | 4 | ALL | 13 | 18 | 18 | 11 | 48 | 10 |
| 70510344 | 2 | Wall, Ceiling | 10 | 16 | 16 | 9 | 44 | 5 |
| 70510544 | 2 | Wall, Ceiling | 13 | 18 | 18 | 11 | 60 | 6 |
| 70540244 | 3 | Wall, Ceiling | 10 | 16 | 17 | 10 | 44 | 7 |
| 70540444 | 3 | Wall, Ceiling | 10 | 28 | 20 | 10 | 60 | 8 |
| 70570344 | 4 | Wall, Ceiling | 13 | 30 | 30 | 11 | 72 | 13 |
| 70570544 | 4 | Wall, Ceiling | 13 | 40 | 40 | 11 | 96 | 18 |

Nederman
IMPROVING YOUR WORKSPACE

39115 Warren
Westland, Michigan
Telephone: (734) 729-3344
Fax:(734) 729-3358
www.nedermanusa.com

# ACCESSORIES

**Revision: 20070111**

## BT2 Standard

**2", 3", 4"**

DATE
PROJECT
LOCATION
ARCH/ENG
REP. NAME

| Brackets | Diameter [in.] | Length [in.] | Weight [lb.] | Part No. |
|---|---|---|---|---|
| Bracket complete | 2", 3", 4" | 10 | 3 | 70501144 |
| Bracket | 2", 3", 4" | - | 2 | 70501244 |
| Extension profile | 2", 3", 4" | 44 | 4 | 70501344 |
| Table bracket | 2", 3", 4" | - | 1 | 70501444 |

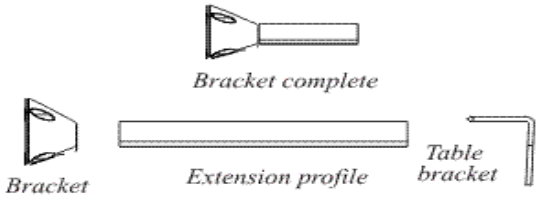


| Hoods | Diameter [in.] | Size [in.] | Weight [lb.] | Part No. |
|---|---|---|---|---|
| Metal hood | 2", 3", 4" | 11 | 1 | 70500444 |
| Multi-purpose hood | 2", 3", 4" | 15 x18 | 1 | 70500144 |

| Reducers | Reduction | Diameter [in.] | Weight [lb.] | Part No. |
|---|---|---|---|---|
| Reducer | 2 ½" | 2", 3", 4" | 1 | 70500644 |
| Reducer | 3 - 3 ¼" | 2", 3", 4" | 1 | 70500744 |
| Reducer | 4" | 2", 3", 4" | 1 | 70500844 |
| Reducer | 5" | 2", 3", 4" | 1 | 70500944 |

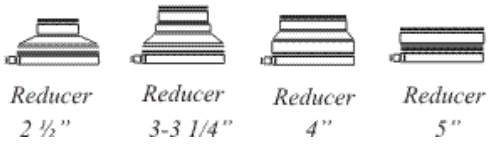


| Accessories | Material |
|---|---|
| Bracket | Aluminum |
| Extension profile | Aluminum, anodized 10 microns |
| Locking parts | Steel, galvanized |
| Table bracket | Steel, galvanized with Polyvinylchloride coating |
| Reducers | Steel, galvanized |
| Metal hoods | Aluminum, power coated |
| Multi-purpose hoods | PET-G |

# Tab 3

| | | |
|---|---|---|
| Nederman<br>IMPROVING YOUR WORKSPACE<br>39115 Warren<br>Westland, Michigan<br>Telephone: (734) 729-3344<br>Fax:(734) 729-3358<br>www.nedermanusa.com | TECHNICAL DATA<br>**Revision: 20070111** | DATE<br>PROJECT<br>LOCATION |
| | **BT2 Chemical Resistant**<br>**Wall, Ceiling, Benchtop, Floor Model** | ARCH/ENG<br>REP. NAME |

**General Description:** Common use in aggressive environments where corrosion resistance must be assured. Engineered for precise "spot extraction" with low air volumes, especially where quiet operations are needed. The arm is designed with state-of-the-art multi-joint maneuverability allowing the operator almost unlimited positioning while maintaining an extraordinarily user-friendliness during the handling of the arm.

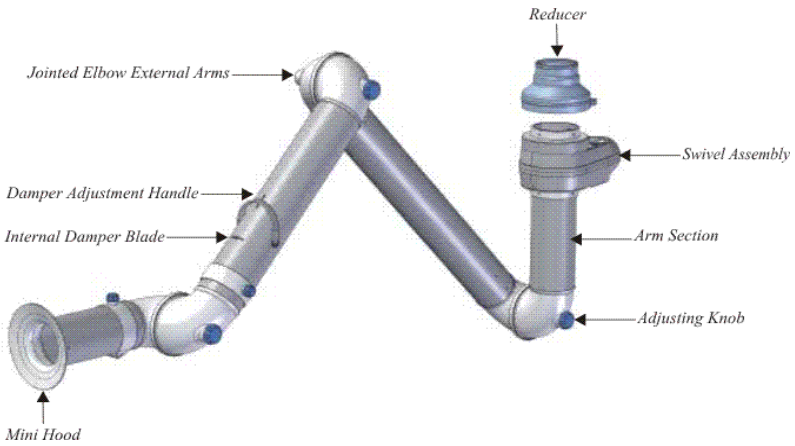


| COMPONENT | DESCRIPTION and/or MATERIAL |
|---|---|
| **ARM SECTIONS** | Aluminum, HM white, with an excellent corrosion resistance against most chemical agents. |
| **SWIVEL ASSEMBLY** | Hi-grade cast aluminum with 360 degree rotation. |
| **JOINTED ELBOWS** | Polypropylene with glass fiber reinforcements and knurled adjusting knobs on the friction joints are supported by ball bearings. Certain sizes incorporate an internal spring support. |
| **EXTERNAL RINGS** | Polypropylene with glass fiber reinforcements. |
| **AXIAL LOCKING RINGS** | Polypropylene with glass fiber reinforcements. |
| **ADJUSTING KNOBS** | Polypropylene with glass fiber reinforcements. Screws into AISI 304 stainless steel. |
| **THREADED SHAFT INSIDE JOINTS** | AISI 304 stainless Steel. |
| **DAMPER BLADE** | Thermo Plastic Elastomer |
| **DAMPER ADJUSTMENT HANDLE** | Aluminum anodized 10 microns. |
| **INTERNAL SPRING** | Stainless Steel |
| **SWIVEL BEARINGS** | Polypropylene with glass fiber reinforcements. |
| **SWIVEL** | Aluminum |
| **RIVETS** | Stainless steel |
| **MINI HOOD** | Standard component at the end of the arm, made of polypropylene. |

Nederman
IMPROVING YOUR WORKSPACE

39115 Warren
Westland, Michigan
Telephone: (734) 729-3344
Fax:(734) 729-3358
www.nedermanusa.com

# PERFORMANCE DATA

**Revision: 20070313**

## BT2 Chemical Resistant
## Wall, Ceiling, Benchtop, Floor Model

| | |
|---|---|
| DATE | |
| PROJECT | |
| LOCATION | |
| ARCH/ENG | |
| REP. NAME | |

## Sound level

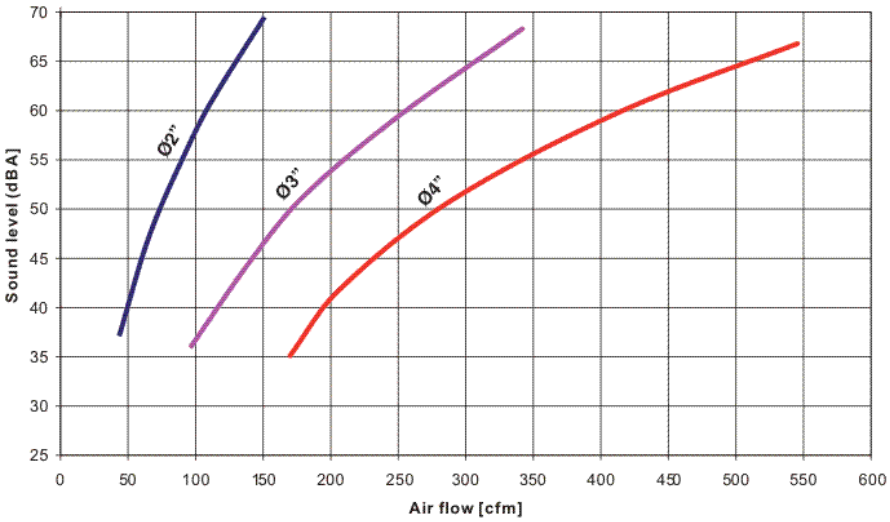

Position of arms when measured

## Pressure drop

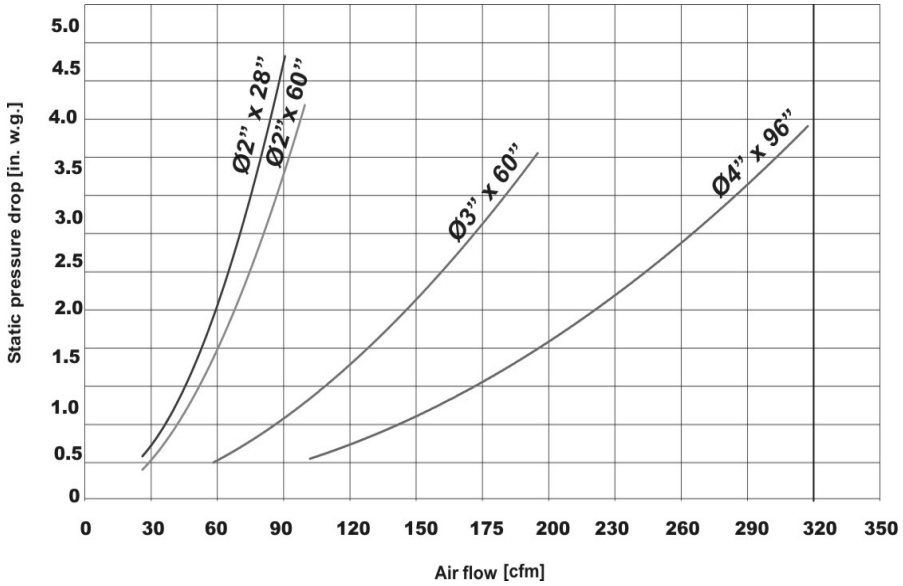

Position of arms when measured

| Recommended airflow [cfm] | |
|---|---|
| Ø 3" | 50-150 |
| Ø 4" | 100-300 |

Nederman
IMPROVING YOUR WORKSPACE
39115 Warren
Westland, Michigan
Telephone: (734) 729-3344
Fax:(734) 729-3358
www.nedermanusa.com

# DIMENSIONAL DATA

**Revision: 20070111**

## BT2 Chemical Resistant

DATE
PROJECT
LOCATION
ARCH/ENG
REP. NAME

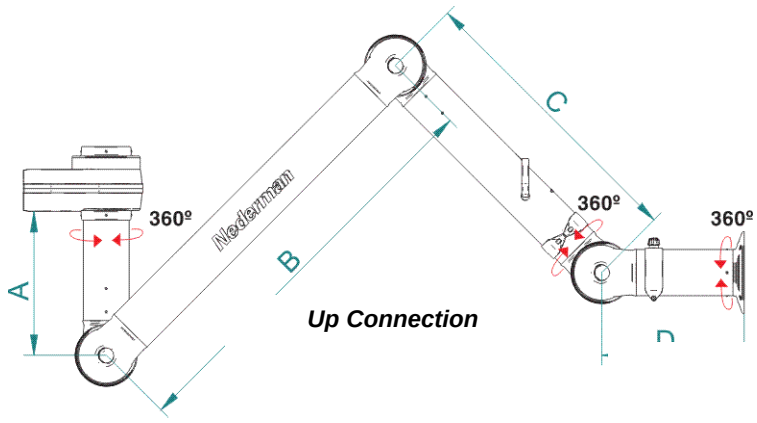


*Up Connection*

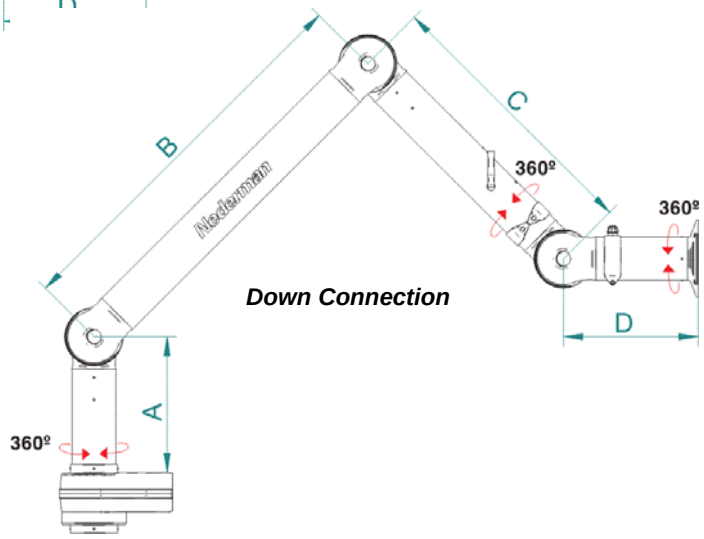


*Down Connection*

## Dimensional Data

| Part No. | Diameter (in.) | Mounting Type | A (in.) | B (in.) | C (in.) | D (in.) | Length (in.) | Weight (lb) |
|---|---|---|---|---|---|---|---|---|
| 70550144 | 3 | Bench, Floor | 10 | 16 | 17 | 10 | 44 | 7 |
| 70550244 | 3 | Wall, Ceiling | 10 | 16 | 17 | 10 | 44 | 7 |
| 70550344 | 3 | Bench, Floor | 10 | 28 | 20 | 10 | 60 | 8 |
| 70550444 | 3 | Wall, Ceiling | 10 | 28 | 20 | 10 | 60 | 8 |
| 70580144 | 4 | ALL | 13 | 18 | 18 | 11 | 48 | 10 |
| 70580244 | 4 | Bench, Floor | 13 | 30 | 30 | 11 | 72 | 13 |
| 70580344 | 4 | Wall, Ceiling | 13 | 30 | 30 | 11 | 72 | 13 |
| 70580544 | 4 | Wall, Ceiling | 13 | 40 | 40 | 11 | 96 | 18 |

Nederman
IMPROVING YOUR WORKSPACE

39115 Warren
Westland, Michigan
Telephone: (734) 729-3344
Fax:(734) 729-3358
www.nedermanusa.com

# ACCESSORIES

**Revision: 20070111**

## BT2 Chemical Resistant Brackets, Hoods, Reducers

DATE
PROJECT
LOCATION
ARCH/ENG
REP. NAME

| Brackets | Diameter [in.] | Length [in.] | Weight [lb.] | Part No. |
|---|---|---|---|---|
| Bracket complete | 3", 4" | 10 | 3 | 70501144 |
| Bracket | 3", 4" | - | 2 | 70501244 |
| Extension profile | 3", 4" | 44 | 4 | 70501344 |
| Table bracket | 3", 4" | - | 1 | 70501444 |

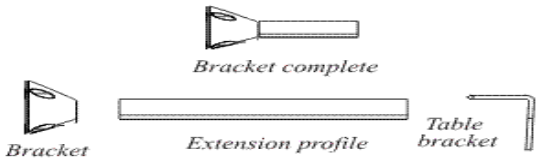


| Hoods | Diameter [in.] | Size [in.] | Weight [lb.] | Part No. |
|---|---|---|---|---|
| Metal hood | 3", 4" | 11 | 1 | 70500444 |
| Multi-purpose hood | 3", 4" | 15 x18 | 1 | 70500344 |

| Reducers | Reduction | Diameter [in.] | Weight [lb.] | Part No. |
|---|---|---|---|---|
| Reducer | 2 ½" | 3", 4" | 1 | 70500644 |
| Reducer | 3 - 3 ¼" | 3", 4" | 1 | 70500744 |
| Reducer | 4" | 3", 4" | 1 | 70500844 |
| Reducer | 5" | 3", 4" | 1 | 70500944 |

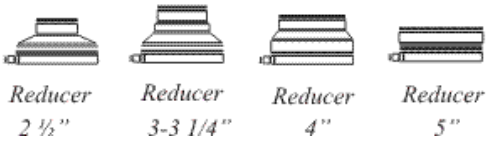


| Accessories | Material |
|---|---|
| Bracket | Aluminum |
| Extension profile | Aluminum, anodized 10 microns |
| Locking parts | Steel, galvanized |
| Table bracket | Steel, galvanized with Polyvinylchloride coating |
| Reducers | Steel, galvanized |
| Metal hoods | Aluminum, power coated |
| Multi-purpose hoods | PE |

# Tab 4

Nederman
IMPROVING YOUR WORKSPACE
39115 Warren
Westland, Michigan
Telephone: (734) 729-3344
Fax:(734) 729-3358
www.nedermanusa.com

# TECHNICAL DATA

**Revision: 20070111**

## BT2 ESD

## 2", 3" 4"

DATE

PROJECT

LOCATION

ARCH/ENG

REP. NAME

**General Description:** designed for use in electronic environments where there is a risk of electrostatic discharges. Following the risk assessment, the ESD/EX can also be used in explosive environments. Engineered for precise "spot extraction" with low air volumes, especially quiet operations are needed. The arm is designed with state-of-the-art multi-joint maneuverability allowing the operator almost unlimited positioning while maintaining an extraordinarily user-friendliness during the handling of the arm.

| COMPONENT | DESCRIPTION and/or MATERIAL |
|---|---|
| **TUBES** | Anodized aluminum 10 microns |
| **JOINTS** | PP Pre-elec with glass filling |
| **PLASTIC RINGS** | PP Pre-elec with glass filling |
| **AXIAL LOCKING RINGS** | PP Pre-elec with glass filling |
| **HAND WHEELS** | PP Pre-elec with glass filling |
| **THREADED PIPES INSIDE JOINTS** | Stainless steel AISI 304. |
| **DAMPER BLADE** | PP- Pre- elec mixed with TPE Pre-elec |
| **DAMPER HANDLE WHEEL** | Anodized aluminum 10 microns |
| **INTERNAL SPRING** | Stainless steel |
| **SWIVEL** | Aluminum |
| **RIVETS** | Aluminum |
| **WALL/CEILING** | Aluminum |
| **ATTACHMENT ALUMINUM PIPE** | Anodized aluminum 10 microns |
| **LOCKING PLATE** | Galvanized Steel |
| **LOCKING BLOCK** | Galvanized Steel |
| **TABLE ATTACHMENT** | Galvanized Steel with PVC Coating |
| **REDUCTIONS** | Galvanized Steel |
| **MINI HOOD** | PP-Pre-elec |
| **METAL HOOD** | Anodized aluminum 10 microns |
| **MULTI-PURPOSE HOODS** | ABS |

Nederman
IMPROVING YOUR WORKSPACE
39115 Warren
Westland, Michigan
Telephone: (734) 729-3344
Fax:(734) 729-3358
www.nedermanusa.com

# PERFORMANCE DATA

**Revision: 20070111**

DATE

PROJECT

LOCATION

ARCH/ENG

REP. NAME

## BT2 ESD

## Wall, Ceiling, Benchtop, Floor Model

## Sound level

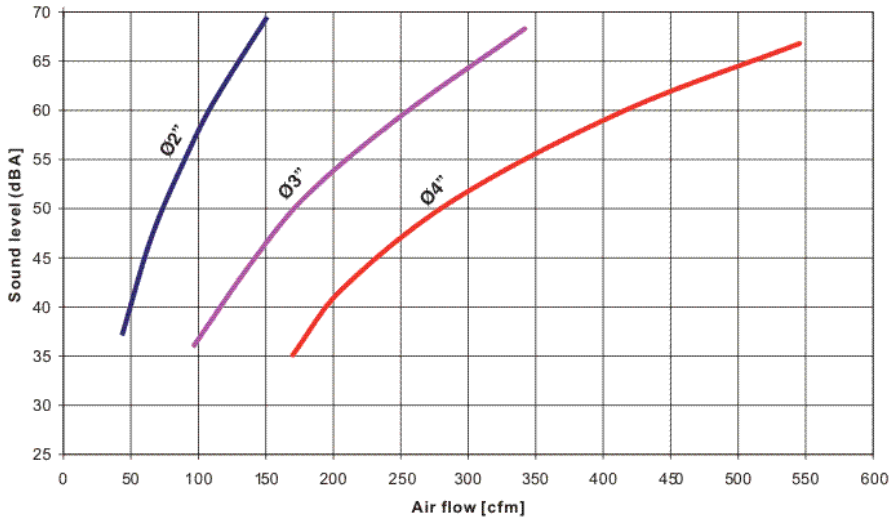

Position of arms when measured

## Pressure drop

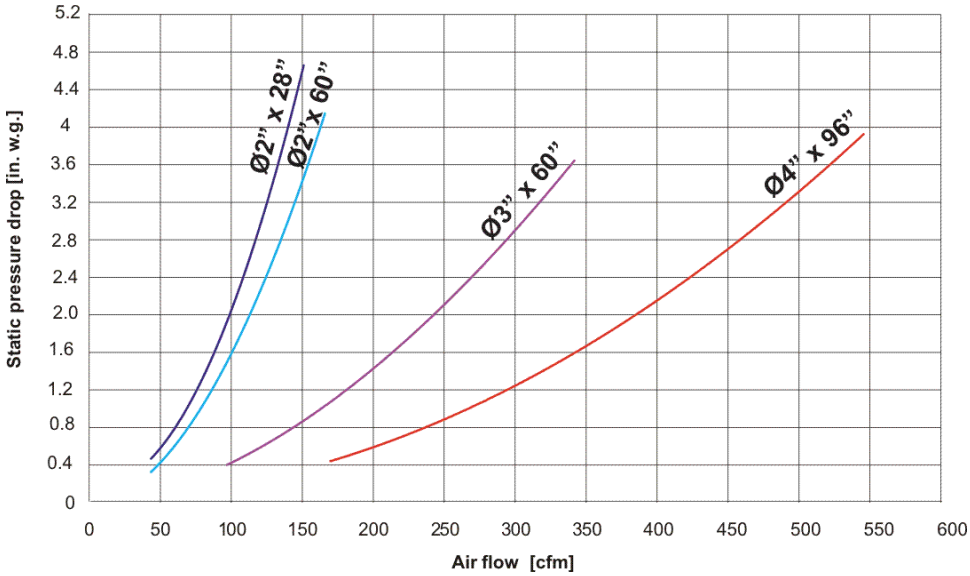

Position of arms when measured

| Recommended airflow [cfm] | |
|---|---|
| Ø 2" | 25-100 |
| Ø 3" | 50-150 |
| Ø 4" | 100-300 |

Nederman
IMPROVING YOUR WORKSPACE

39115 Warren
Westland, Michigan
Telephone: (734) 729-3344
Fax:(734) 729-3358
www.nedermanusa.com

# DIMENSIONAL DATA

**Revision: 20070111**

## BT2 ESD

## Wall, Ceiling, Benchtop, Floor

DATE

PROJECT

LOCATION

ARCH/ENG

REP. NAME

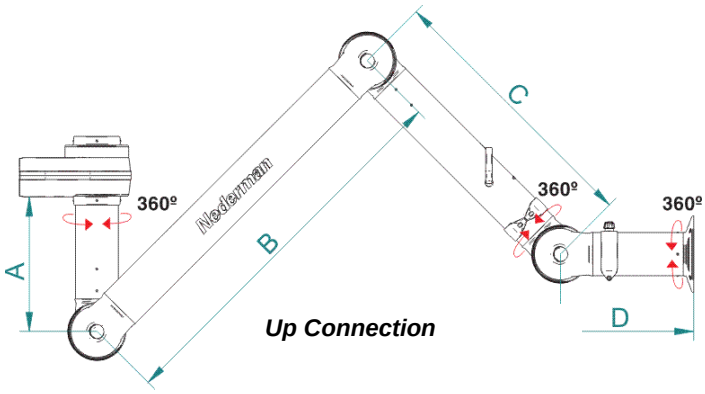


*Up Connection*

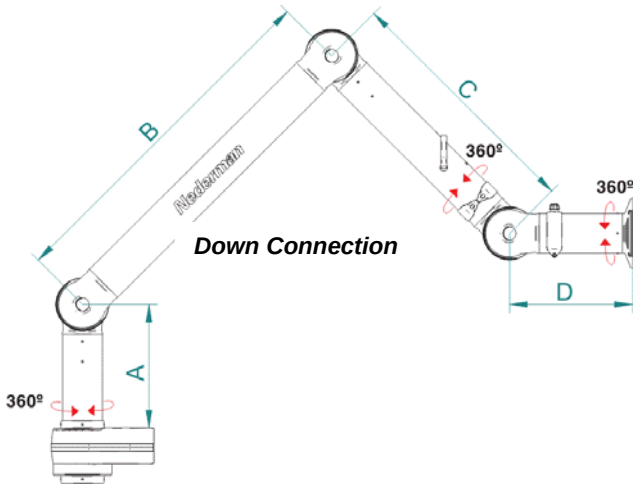


*Down Connection*

## Dimensional Data

| Connection Direction | Diameter (in) | A (in) | B (in) | C (in) | D (in) | Length (in) | Original Part No. |
|---|---|---|---|---|---|---|---|
| Up/Down | 2 | 10 | 17 | 9 | - | 28 | 70530144 |
| Down | 2 | 10 | 16 | 16 | 9 | 44 | 70530244 |
| Down | 2 | 10 | 28 | 20 | 9 | 60 | 70530444 |
| Up | 2 | 10 | 16 | 16 | 9 | 44 | 70530344 |
| Up | 2 | 13 | 18 | 18 | 11 | 60 | 70530544 |
| Down | 3 | 10 | 16 | 17 | 10 | 44 | 70560144 |
| Down | 3 | 10 | 28 | 20 | 10 | 60 | 70560344 |
| Up | 3 | 10 | 16 | 17 | 10 | 44 | 70560244 |
| Up | 3 | 10 | 28 | 20 | 10 | 60 | 70560444 |
| Up/Down | 4 | 13 | 18 | 18 | 11 | 48 | 70590144 |
| Up/Down | 4 | 13 | 30 | 30 | 11 | 72 | 70590244 |
| Up | 4 | 13 | 30 | 30 | 11 | 72 | 70590344 |
| Up | 4 | 13 | 40 | 40 | 11 | 96 | 70590544 |

Nederman
IMPROVING YOUR WORKSPACE

39115 Warren
Westland, Michigan
Telephone: (734) 729-3344
Fax:(734) 729-3358
www.nedermanusa.com

# ACCESSORIES

**Revision: 20070111**

## BT2 ESD
## Brackets, Hoods, Reducers

DATE
PROJECT
LOCATION
ARCH/ENG
REP. NAME

| Brackets | Diameter [in.] | Length [in.] | Weight [lb.] | Part No. |
|---|---|---|---|---|
| Bracket complete | 2”, 3”, 4” | 10 | 3 | 70501144 |
| Bracket | 2”, 3”, 4” | - | 2 | 70501244 |
| Extension profile | 2”, 3”, 4” | 44 | 4 | 70501344 |
| Table bracket | 2”, 3”, 4” | - | 1 | 70501444 |

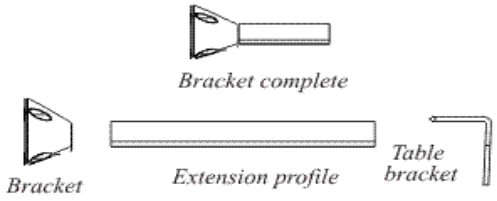


| Hoods | Diameter [in.] | Size [in.] | Weight [lb.] | Part No. |
|---|---|---|---|---|
| Metal hood | 2”, 3”, 4” | 11 | 1 | 70500544 |
| Multi-purpose h | 2”, 3”, 4” | 15 x18 | 1 | 70500244 |

| Reducers | Reduction | Diameter [in.] | Weight [lb.] | Part No. |
|---|---|---|---|---|
| Reducer | 2 ½” | 2”, 3”, 4” | 1 | 70500644 |
| Reducer | 3 - 3 ¼” | 2”, 3”, 4” | 1 | 70500744 |
| Reducer | 4” | 2”, 3”, 4” | 1 | 70500844 |
| Reducer | 5” | 2”, 3”, 4” | 1 | 70500944 |

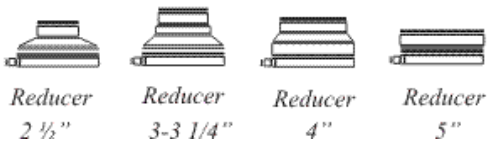


| Accessories | Material |
|---|---|
| Bracket | Aluminum |
| Extension profile | Aluminum, anodized 10 microns |
| Locking parts | Steel, galvanized |
| Table bracket | Steel, galvanized with Polyvinylchloride coating |
| Reducers | Steel, galvanized |
| Metal hoods | Aluminum, anodized 10 microns |
| Multi-purpose hoods | ABS |

# Tab 5

Nederman
IMPROVING YOUR WORKSPACE

39115 Warren
Westland, Michigan
Telephone: (734) 729-3344
Fax:(734) 729-3358
www.nedermanusa.com

# TECHNICAL DATA

**Revision: 20070208**

## EK 500

## Extractor Kit 500

| | |
|---|---|
| DATE | |
| PROJECT | |
| LOCATION | |
| ARCH/ENG | |
| REP. NAME | |

**General description:** **EK500** is a compact filter solution with a very low sound level.

A damper can regulate the airflow in the arm. The extraction hood supplied with the kit improves the capture ability for heavy and light gases.

The air passes through an efficient filter with particle and gas filtration.

The filter captures the noxious fumes and gases that normally occur when soldering, gluing and working with solvents.

The filter is disposable and is easily changed. The arm is over three feet and is easily mounted without tools on to the workbench. It is flexible in all directions.

Nederman
IMPROVING YOUR WORKSPACE
39115 Warren
Westland, Michigan
Telephone: (734) 729-3344
Fax:(734) 729-3358
www.nedermanusa.com

# PERFORMANCE DATA

**Revision: 200700208**

## Extractor Kit 500

DATE

PROJECT

LOCATION

ARCH/ENG

REP. NAME

### Airflow vs. Pressure Drop

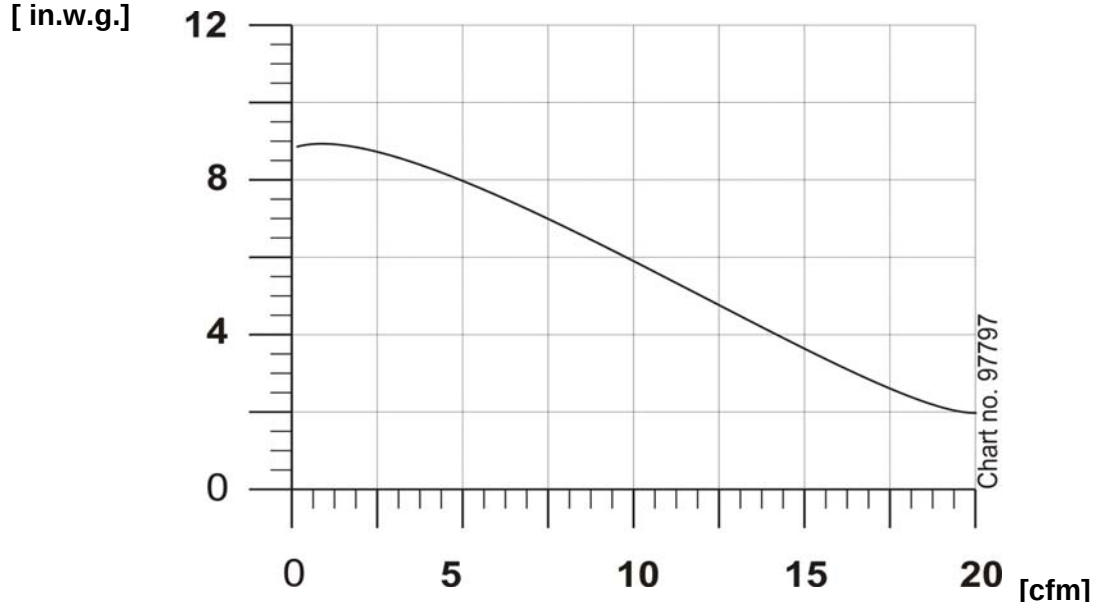


| Description | |
|---|---|
| Airflow at working conditions | 18 |
| Power [HP] | 1/10 |
| Voltage [V] | 110 |
| Frequency [Hz] | 60 |
| Filtration efficiency [%] * | ≥ 99.97 |
| Weight [lbs] | 19 |
| Noise level [db A] ** | 43 |

* @ 0.3 μm DOP.
** According to ISO 6081

Nederman
IMPROVING YOUR WORKSPACE

39115 Warren
Westland, Michigan
Telephone: (734) 729-3344
Fax:(734) 729-3358
www.nedermanusa.com

# ACCESSORIES

**Revision: 20070208**

## EK 500
## Extractor Kit 500

DATE

PROJECT

LOCATION

ARCH/ENG

REP. NAME

| | Description | Part number |
|---|---|---|
| | **Dome shaped hood 10"** | **70371757** |
| 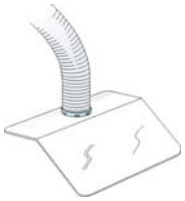 | **Flange hood [W x H] 6" X 6"** | **70371525** |

Nederman
IMPROVING YOUR WORKSPACE

39115 Warren
Westland, Michigan
Telephone: (734) 729-3344
Fax:(734) 729-3358
www.nedermanusa.com

# SPARE PARTS

**Revision: 20070226**

DATE

PROJECT

LOCATION

ARCH/ENG

REP. NAME

## Extractor Kit 500

## Part Number: 70510834

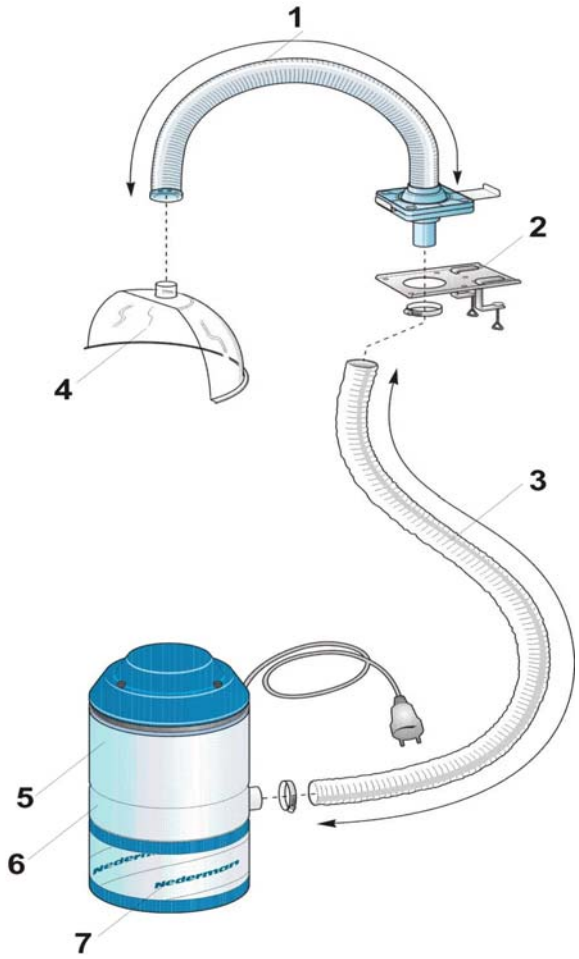


| Detail | Description | Part Number |
|---|---|---|
| 1 | FX 32 Arm 1 1/4" x 39" | 70502834 |
| 2 | Table bracket | 70371761 |
| 3 | Hose 1 1/4" x 5' | included in 5 |
| 4 | Half dome hood 10" ESD | 70371756 |
| 5 | CX5500 ESD | 70503349 |
| 6 | HEPA filter | 70371503 |
| 7 | Particle/Gas filter | 70371596 |

Nederman
IMPROVING YOUR WORKSPACE

39115 Warren
Westland, Michigan
Telephone: (734) 729-3344
Fax:(734) 729-3358
www.nedermanusa.com

# TECHNICAL DATA

**Revision: 20070221**

| | |
|---|---|
| DATE | |
| PROJECT | |
| LOCATION | |
| ARCH/ENG | |
| REP. NAME | |

## EK 500 ESD

## Extractor Kit 500 ESD

**General description:** **EK500 ESD** antistatic is a compact filter solution with a very low sound level.

A damper can regulate the airflow in the arm. The extraction hood supplied with the kit improves the capture ability for heavy and light gases.

The air passes through an efficient filter with particle and gas filtration.

The filter captures the noxious fumes and gases that normally occur when soldering, gluing and working with solvents.

The filter is disposable and is easily changed. The arm is over three feet and is easily mounted without tools on to the workbench. It is flexible in all directions.

Nederman
IMPROVING YOUR WORKSPACE
39115 Warren
Westland, Michigan
Telephone: (734) 729-3344
Fax:(734) 729-3358
www.nedermanusa.com

# PERFORMANCE DATA

**Revision: 200700221**

## Extractor Kit 500 ESD

DATE
PROJECT
LOCATION
ARCH/ENG
REP. NAME

### Airflow vs. Pressure Drop

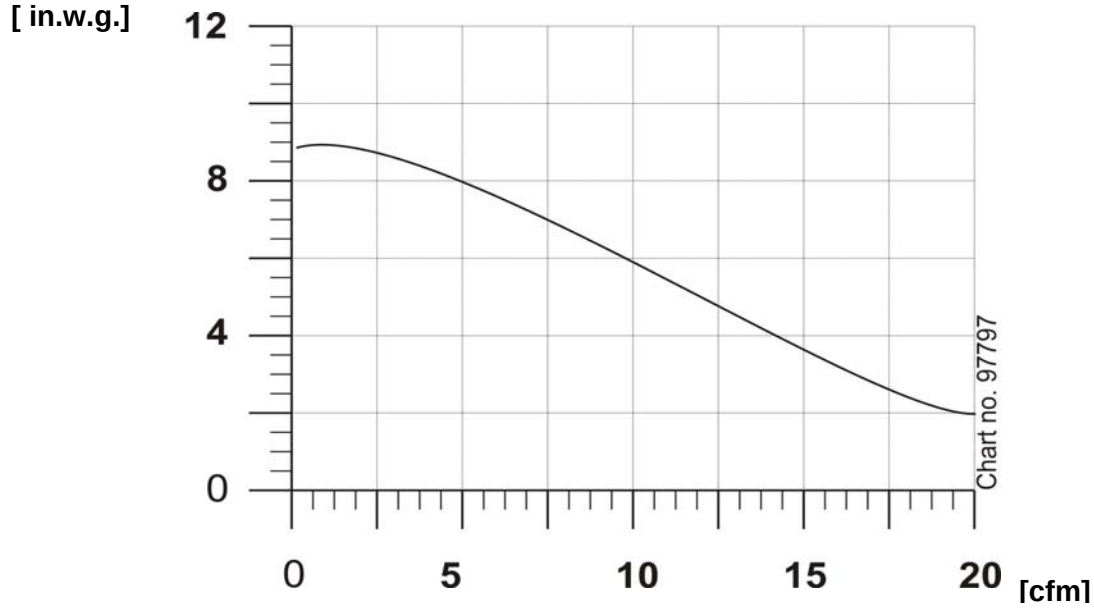


| Description | |
|---|---|
| Airflow at working conditions | 18 |
| Power [HP] | 1/10 |
| Voltage [V] | 110 |
| Frequency [Hz] | 60 |
| Filtration efficiency [%] * | ≥ 99.97 |
| Weight [lbs] | 19 |
| Noise level [db A] ** | 43 |

* @ 0.3 μm DOP.
** According to ISO 6081

Nederman
IMPROVING YOUR WORKSPACE

39115 Warren
Westland, Michigan
Telephone: (734) 729-3344
Fax:(734) 729-3358
www.nedermanusa.com

# ACCESSORIES

**Revision: 20070221**

## EK 500 ESD
## Extractor Kit 500 ESD

DATE

PROJECT

LOCATION

ARCH/ENG

REP. NAME

| | Description | Part number |
|---|---|---|
| | **Dome shaped hood 10" ESD** | **70371808** |

Nederman
IMPROVING YOUR WORKSPACE

39115 Warren
Westland, Michigan
Telephone: (734) 729-3344
Fax:(734) 729-3358
www.nedermanusa.com

# SPARE PARTS

**Revision: 20070221**

DATE

PROJECT

LOCATION

ARCH/ENG

REP. NAME

## Extractor Kit 500 ESD

## Part Number: 70510839

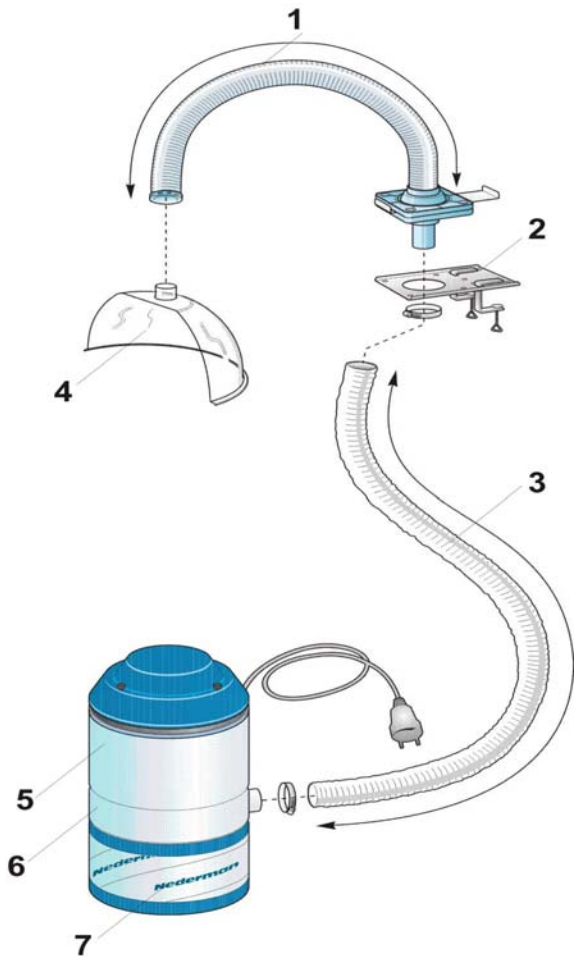


| Detail | Description | Part Number |
|---|---|---|
| 1 | FX 32 Arm 1 1/4" x 39", ESD | 70502934 |
| 2 | Table bracket | 70371761 |
| 3 | Hose (black)1 1/4" x 5' ,ESD | included in 5 |
| 4 | Half dome hood 10" ESD | 70371807 |
| 5 | CX5500 ESD | 70503349 |
| 6 | HEPA filter | 70371503 |
| 7 | Particle/Gas filter | 70371596 |

# Tab 6

Nederman
IMPROVING YOUR WORKSPACE

39115 Warren
Westland, Michigan
Telephone: (734) 729-3344
Fax:(734) 729-3358
www.nedermanusa.com

# Technical Data

**Revision: 20070208**

## EK 1000
## Extractor Kit 1000

DATE

PROJECT

LOCATION

ARCH/ENG

REP. NAME

**General description: EK1000** enables two simultaneous users to capture and filter the noxious fumes and gases that normally occur when soldering, gluing and working with solvents.

The air is filtered through a particle and gas filter. The filter is disposable and filter change is made dust free.

The speed of the fan is variably controlled by a speed controlled, placed on the workbench.

The user can also adjust the airflow by using the damper included in each arm.

Correct airflow can easily be set to suit different applications.

The extraction hood supplied with the kit improves the capture ability for heavy and light gases. There are two optional hoods shown under accessories.

Nederman
IMPROVING YOUR WORKSPACE
39115 Warren
Westland, Michigan
Telephone: (734) 729-3344
Fax:(734) 729-3358
www.nedermanusa.com

# PERFORMANCE DATA

**Revision: 20070122**

**Extractor Kit 1000**

DATE
PROJECT
LOCATION
ARCH/ENG
REP. NAME

## Airflow vs. Pressure Drop (fan only)

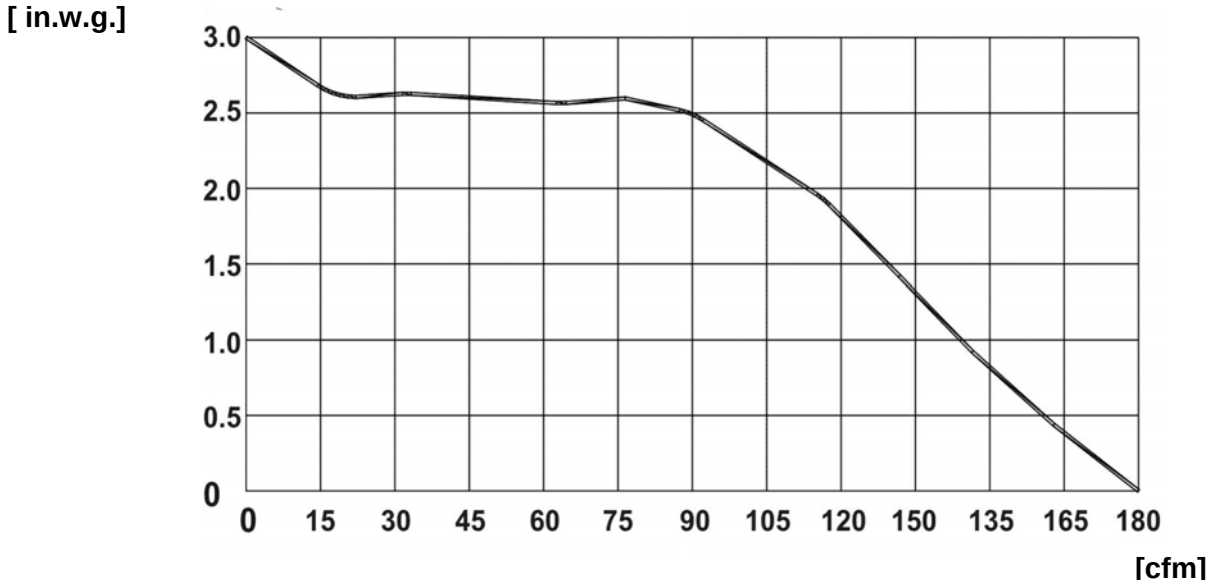


| Description | |
|---|---|
| Airflow at working conditions [cfm] (44X2) | 88 |
| Power [HP] | 1/5 |
| Voltage [V] | 110 |
| Frequency [Hz] | 60 |
| Filtration efficiency [%] * | ≥ 99.97 |
| Filter area [$ft^2$] | 27 |
| Carbon weight in combined filter [lbs] | 3 |
| Carbon weight in ALL carbon filter [lbs] | 14 |
| Weight (including all components) [lbs] *** | 29 |
| Noise level [db A] ** | 58 |

* @ 0.3 μm DOP.
** According to ISO 6081
*** With combined filter

Nederman
IMPROVING YOUR WORKSPACE

39115 Warren
Westland, Michigan
Telephone: (734) 729-3344
Fax:(734) 729-3358
www.nedermanusa.com

# ACCESSORIES
**Revision: 20070208**

## EK 1000
## Extractor Kit 1000

DATE
PROJECT
LOCATION
ARCH/ENG
REP. NAME

| | Description | Part number |
|---|---|---|
| | **Pre Filter** | **70333007** |
| 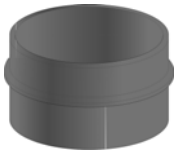 | **Two Filters Coupler** | **70332904** |
| 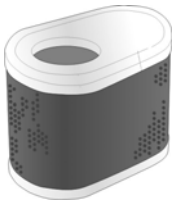 | **All Carbon Filter** | **70312427** |
| | **ESD Silencer Box** | **70311429** |
| | **Dome shaped hood 10"** | **70371757** |
| 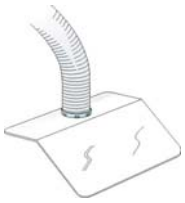 | **Flange hood<br>[W x H] 6" x 6"** | **70371525** |

Nederman
IMPROVING YOUR WORKSPACE

39115 Warren
Westland, Michigan
Telephone: (734) 729-3344
Fax:(734) 729-3358
www.nedermanusa.com

# SPARE PARTS

**Revision: 20070208**

DATE

PROJECT

LOCATION

ARCH/ENG

REP. NAME

## Extractor Kit 1000

## Part Number: 70511334

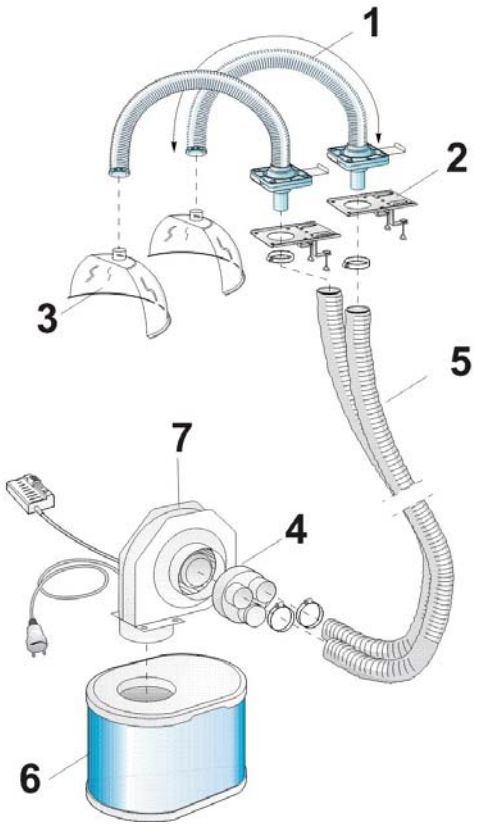


| Detail | Description | Part Number |
|---|---|---|
| 1 | FX 32 Arm 1 1/4" x 39" | 70502834 |
| 2 | Table bracket | 70371761 |
| 3 | Half Dome hood (10") | 70371757 |
| 4 | Adapter 3 Way 3 x 1 3/4" to 1 x 5 " | 70372012 |
| 5 | Hose 1 3/4" x 10" | 70372013 |
| 6 | Standard Filter | 70311427 |
| 6 | Carbon Filter | 70312427 |
| 7 | Fan 110V, 112W, 60Hz | 70800334 |

Nederman
IMPROVING YOUR WORKSPACE

39115 Warren
Westland, Michigan
Telephone: (734) 729-3344
Fax:(734) 729-3358
www.nedermanusa.com

# Technical Data

**Revision: 20070221**

## EK1000 ESD
## Extractor Kit 1000 ESD

DATE

PROJECT

LOCATION

ARCH/ENG

REP. NAME

**General description: EK1000 ESD** antistatic enables two simultaneous users to capture and filter the noxious fumes and gases that normally occur when soldering, gluing and working with solvents.

The air is filtered through a particle and gas filter. The filter is disposable and filter change is made dust free.

The speed of the fan is variably controlled by a speed controlled, placed on the workbench.

The user can also adjust the airflow by using the damper included in each arm.

Correct airflow can easily be set to suit different applications.

The extraction hood supplied with the kit improves the capture ability for heavy and light gases. There are two optional hoods shown under accessories.

Nederman
IMPROVING YOUR WORKSPACE
39115 Warren
Westland, Michigan
Telephone: (734) 729-3344
Fax:(734) 729-3358
www.nedermanusa.com

# PERFORMANCE DATA

**Revision: 20070220**

## Extractor Kit 1000 ESD

DATE
PROJECT
LOCATION
ARCH/ENG
REP. NAME

### Airflow vs. Pressure Drop (fan only)

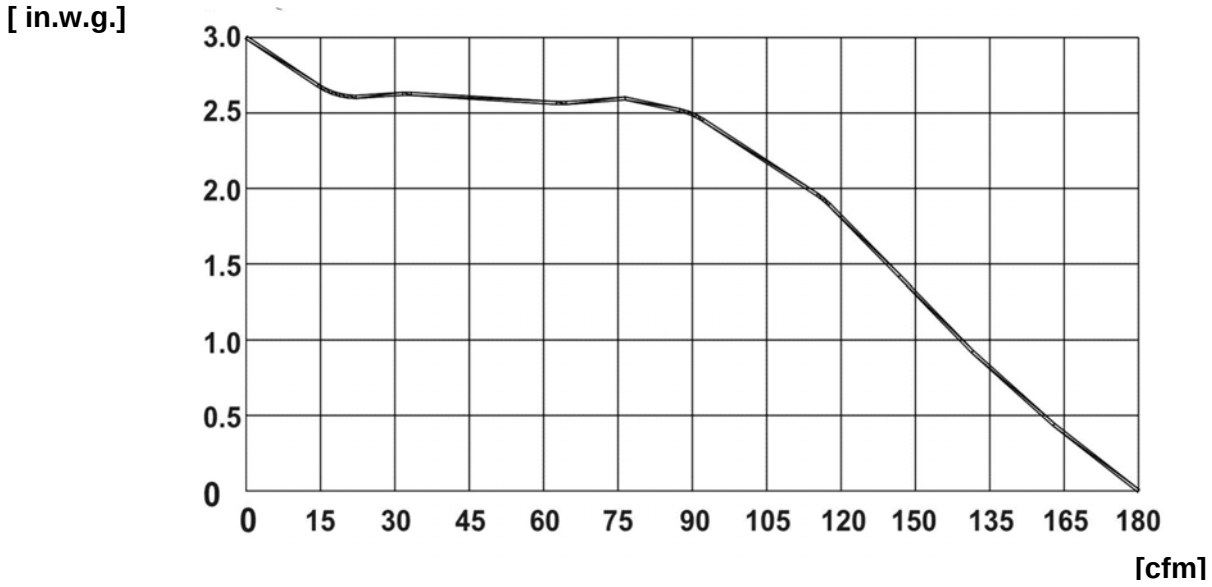


| Description | |
|---|---|
| Airflow at working conditions [cfm] (44X2) | 88 |
| Power [HP] | 1/5 |
| Voltage [V] | 110 |
| Frequency [Hz] | 60 |
| Filtration efficiency [%] * | ≥ 99.97 |
| Filter area [$ft^2$] | 27 |
| Carbon weight in combined filter [lbs] | 3 |
| Carbon weight in ALL carbon filter [lbs] | 14 |
| Weight (including all components) [lbs] *** | 29 |
| Noise level [db A] ** | 58 |

* @ 0.3 μm DOP.
** According to ISO 6081
*** With combined filter

Nederman
IMPROVING YOUR WORKSPACE

39115 Warren
Westland, Michigan
Telephone: (734) 729-3344
Fax:(734) 729-3358
www.nedermanusa.com

# ACCESSORIES
**Revision: 20070220**

## EK 1000 ESD
## Extractor Kit 1000 ESD

DATE
PROJECT
LOCATION
ARCH/ENG
REP. NAME

| | Description | Part number |
|---|---|---|
| | **Pre Filter** | **70333007** |
| 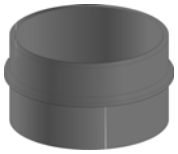 | **Two Filters Coupler** | **70332904** |
| 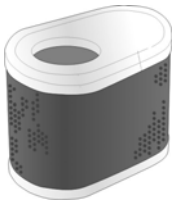 | **All Carbon Filter** | **70312427** |
| | **ESD Silencer Box** | **70311429** |
| | **Dome shaped hood 10" ESD** | **70371808** |

Nederman
IMPROVING YOUR WORKSPACE

39115 Warren
Westland, Michigan
Telephone: (734) 729-3344
Fax:(734) 729-3358
www.nedermanusa.com

# SPARE PARTS

**Revision: 20070220**

DATE

PROJECT

LOCATION

ARCH/ENG

REP. NAME

## Extractor Kit 1000 ESD

## Part Number: 70511339

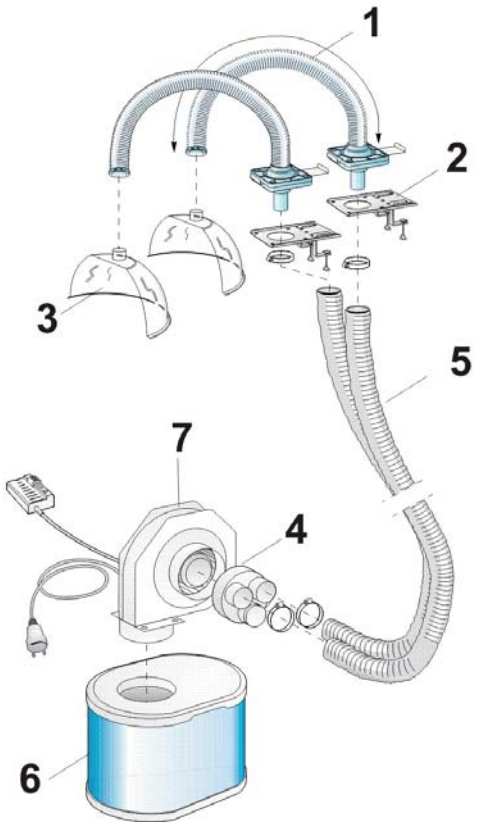


| Detail | Description | Part Number |
|---|---|---|
| 1 | FX 32 Arm 1 1/4" x 39" ESD | 70502934 |
| 2 | Table bracket | 70371761 |
| 3 | Half Dome hood (10") ESD | 70371857 |
| 4 | Adapter 3 Way 3 x 1 3/4" to 1 x 5" | 70372012 |
| 5 | Hose 1 3/4" x 10', ESD black | 70372913 |
| 6 | Standard Filter | 70311427 |
| 6 | Carbon Filter | 70312427 |
| 7 | Fan 110V, 112W, 60Hz | 70800334 |

# Tab 7

Nederman
IMPROVING YOUR WORKSPACE

39115 Warren
Westland, Michigan
Telephone: (734) 729-3344
Fax:(734) 729-3358
www.nedermanusa.com

# TECHNICAL DATA

**Revision: 20070208**

DATE

PROJECT

LOCATION

ARCH/ENG

REP. NAME

## EK 1500

## Extractor Kit 1500

**General description:** **EK1500** is a complete system for the capture and filtration of fumes and gases.

Each arm is connected to the fan by a 10 feet long hose.

The speed of the fan is variable controlled by a speed controller.

Each arm is also supplied with a damper, which enables the user to adjust the airflow in the arm.

Correct airflow can easily be set to suit different applications.

The air is filtered through a particle and gas filter. The filter captures the noxious fumes and gases that normally occur when soldering as well as working with glue and solvents.

The filter is disposable and the filter change is made dust free.

The extraction hoods, supplied with the kit increases the capture efficiency.

Two optional hoods can be found under accessories.

Nederman
IMPROVING YOUR WORKSPACE
39115 Warren
Westland, Michigan
Telephone: (734) 729-3344
Fax:(734) 729-3358
www.nedermanusa.com

# PERFORMANCE DATA

**Revision: 200700208**

**Extractor Kit 1500**

| | |
|---|---|
| DATE | |
| PROJECT | |
| LOCATION | |
| ARCH/ENG | |
| REP. NAME | |

## Airflow vs. Pressure Drop (fan only)

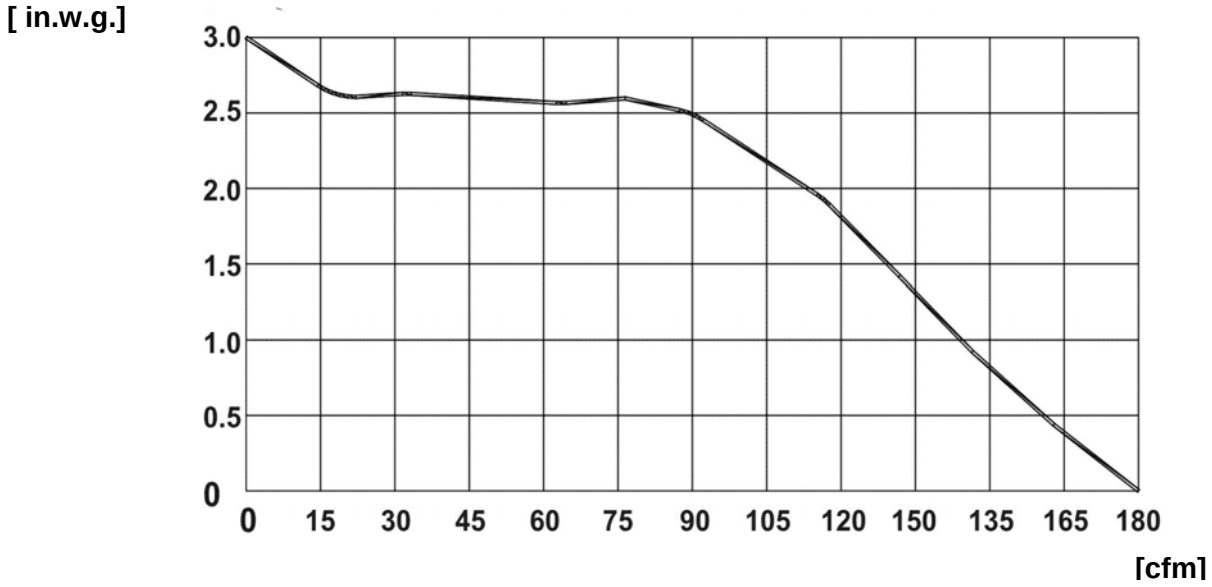


| Description | |
|---|---|
| Airflow at working conditions [cfm] (3 X 22) | 66 |
| Power [HP] | 1/5 |
| Voltage [V] | 110 |
| Frequency [Hz] | 60 |
| Filtration efficiency [%] * | ≥ 99.97 |
| Filter area [$ft^2$] | 27 |
| Carbon weight in combined filter [lbs] | 3 |
| Carbon weight in ALL carbon filter [lbs] | 14 |
| Weight (including all components) [lbs] *** | 29 |
| Noise level [db A] ** | 58 |

* @ 0.3 μm DOP.
** According to ISO 6081
*** With combined filter

Nederman
IMPROVING YOUR WORKSPACE

39115 Warren
Westland, Michigan
Telephone: (734) 729-3344
Fax:(734) 729-3358
www.nedermanusa.com

# ACCESSORIES
**Revision: 20070208**

## EK 1500
## Extractor Kit 1500

DATE
PROJECT
LOCATION
ARCH/ENG
REP. NAME

| | Description | Part number |
|---|---|---|
| | **Pre Filter** | **70333007** |
| 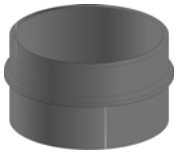 | **Two Filters Coupler** | **70332904** |
| 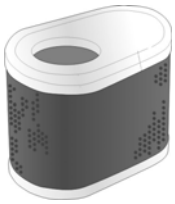 | **All Carbon Filter** | **70312427** |
| | **ESD Silencer Box** | **70311429** |
| | **Dome shaped hood 10"** | **70371757** |
| 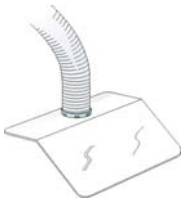 | **Flange hood<br>[W x H] 6" X 6"** | **70371525** |

| | | |
|---|---|---|
| Nederman<br>IMPROVING YOUR WORKSPACE<br><br>39115 Warren<br>Westland, Michigan<br>Telephone: (734) 729-3344<br>Fax:(734) 729-3358<br>www.nedermanusa.com | SPARE PARTS<br>**Revision: 20070208** | DATE<br>PROJECT<br>LOCATION |
| | **Extractor Kit 1500**<br>**Part Number: 70511834** | ARCH/ENG<br>REP. NAME |

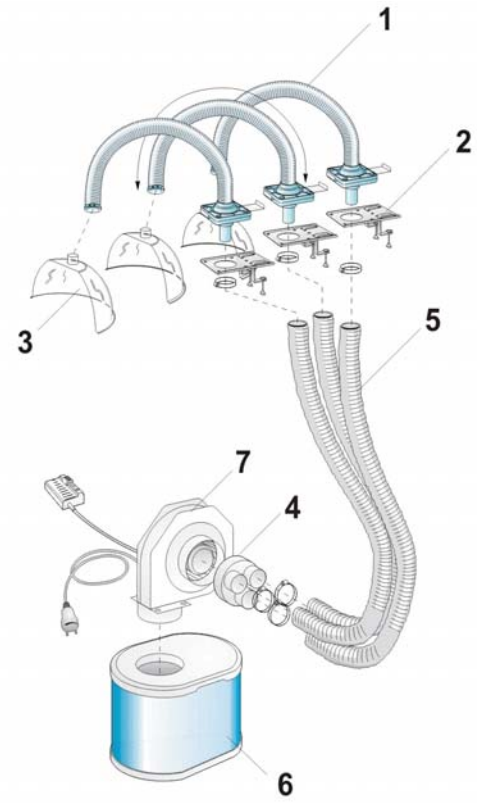


| Detail | Description | Part Number |
|---|---|---|
| 1 | FX 32 Arm (1 1/4" x 39") | 70502834 |
| 2 | Table bracket | 70371761 |
| 3 | Half dome hood 10" | 70371757 |
| 4 | Adapter 3 way (3 x 11/4" x 1 x 5") | 70372012 |
| 5 | Hose (grey) (1/34" x 10') | 70372013 |
| 6 | Standard Filter | 70311427 |
| 6 | Carbon Filter | 70312427 |
| 7 | Fan 110V, 112W, 60Hz | 70800334 |

Nederman
IMPROVING YOUR WORKSPACE

39115 Warren
Westland, Michigan
Telephone: (734) 729-3344
Fax:(734) 729-3358
www.nedermanusa.com

# TECHNICAL DATA

**Revision: 20070220**

| | |
|---|---|
| DATE | |
| PROJECT | |
| LOCATION | |
| ARCH/ENG | |
| REP. NAME | |

## EK 1500 ESD

## Extractor Kit 1500 ESD

**General description:** **EK1500 ESD** antistatic is a complete system for the capture and filtration of fumes and gases.

Each arm is connected to the fan by a 10 feet long hose.

The speed of the fan is variable controlled by a speed controller.

Each arm is also supplied with a damper, which enables the user to adjust the airflow in the arm.

Correct airflow can easily be set to suit different applications.

The air is filtered through a particle and gas filter. The filter captures the noxious fumes and gases that normally occur when soldering as well as working with glue and solvents.

The filter is disposable and the filter change is made dust free.

The extraction hoods, supplied with the kit increases the capture efficiency.

Two optional hoods can be found under accessories.

Nederman
IMPROVING YOUR WORKSPACE
39115 Warren
Westland, Michigan
Telephone: (734) 729-3344
Fax:(734) 729-3358
www.nedermanusa.com

# PERFORMANCE DATA

**Revision: 200700220**

**Extractor Kit 1500 ESD**

DATE
PROJECT
LOCATION
ARCH/ENG
REP. NAME

## Airflow vs. Pressure Drop (fan only)

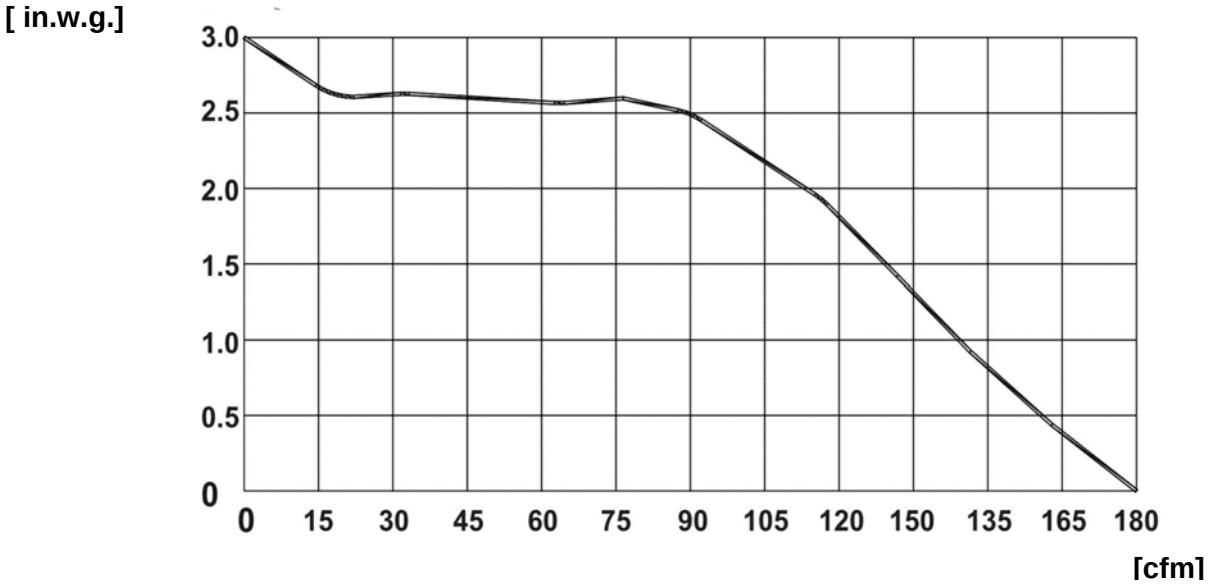


| Description | |
|---|---|
| Airflow at working conditions [cfm] (3 X 22) | 66 |
| Power [HP] | 1/5 |
| Voltage [V] | 110 |
| Frequency [Hz] | 60 |
| Filtration efficiency [%] * | ≥ 99.97 |
| Filter area [$ft^2$] | 27 |
| Carbon weight in combined filter [lbs] | 3 |
| Carbon weight in ALL carbon filter [lbs] | 14 |
| Weight (including all components) [lbs] *** | 29 |
| Noise level [db A] ** | 58 |

* @ 0.3 μm DOP.
** According to ISO 6081
*** With combined filter

Nederman
IMPROVING YOUR WORKSPACE

39115 Warren
Westland, Michigan
Telephone: (734) 729-3344
Fax:(734) 729-3358
www.nedermanusa.com

# ACCESSORIES

**Revision: 20070221**

## EK 1500 ESD
## Extractor Kit 1500 ESD

DATE

PROJECT

LOCATION

ARCH/ENG

REP. NAME

| | Description | Part number |
|---|---|---|
| | **Pre Filter** | **70333007** |
| 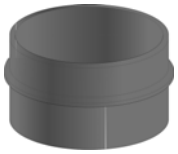 | **Two Filters Coupler** | **70332904** |
| 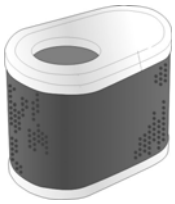 | **All Carbon Filter** | **70312427** |
| | **ESD Silencer Box** | **70311429** |
| | **Dome shaped hood 10" ESD** | **70371808** |

| | | |
|---|---|---|
| Nederman<br>IMPROVING YOUR WORKSPACE<br><br>39115 Warren<br>Westland, Michigan<br>Telephone: (734) 729-3344<br>Fax:(734) 729-3358<br>www.nedermanusa.com | SPARE PARTS<br>**Revision: 20070208** | DATE<br>PROJECT<br>LOCATION |
| | **Extractor Kit 1500 ESD**<br>**Part Number: 70511339** | ARCH/ENG<br>REP. NAME |

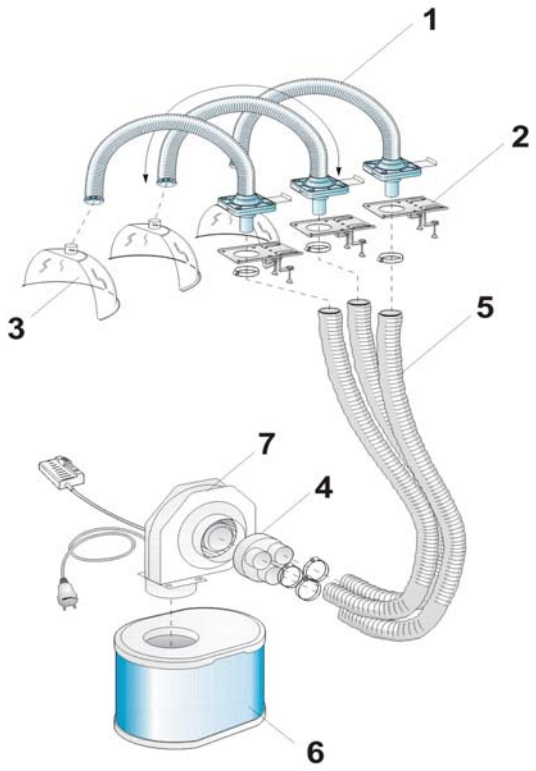


| Detail | Description | Part Number |
|---|---|---|
| 1 | FX 32 Arm (1 1/4" x 39") ESD | 70502934 |
| 2 | Table bracket | 70371761 |
| 3 | Half dome hood (10") ESD | 70371807 |
| 4 | Adapter 3 way (3 x 11/4" x 1 x 5") | 70372012 |
| 5 | Hose ( 1 3/4" x 10' )ESD, black | 70372913 |
| 6 | Standard Filter | 70311427 |
| 6 | Carbon Filter | 70312427 |
| 7 | Fan 110V, 112W, 60Hz | 70800334 |

# Tab 8

Nederman
IMPROVING YOUR WORKSPACE

39115 Warren
Westland, Michigan
Telephone: (734) 729-3344
Fax:(734) 729-3358
www.nedermanusa.com

# TECHNICAL DATA

**Revision: 20070122**

| | |
|---|---|
| DATE | |
| PROJECT | |
| LOCATION | |
| ARCH/ENG | |
| REP. NAME | |

## EK 2000

## Extractor Kit 2000

**General description:** The EK 2000 is a personalized complete system for the capture at source and filtration of fumes and gases.

The air is filtered through a disposable particle and an activated carbon combined filter.

This filter captures the noxious fumes and gases that occur when soldering, gluing or working with solvents.
It comes with a variable speed controller, which is used to regulate the speed of the fan.

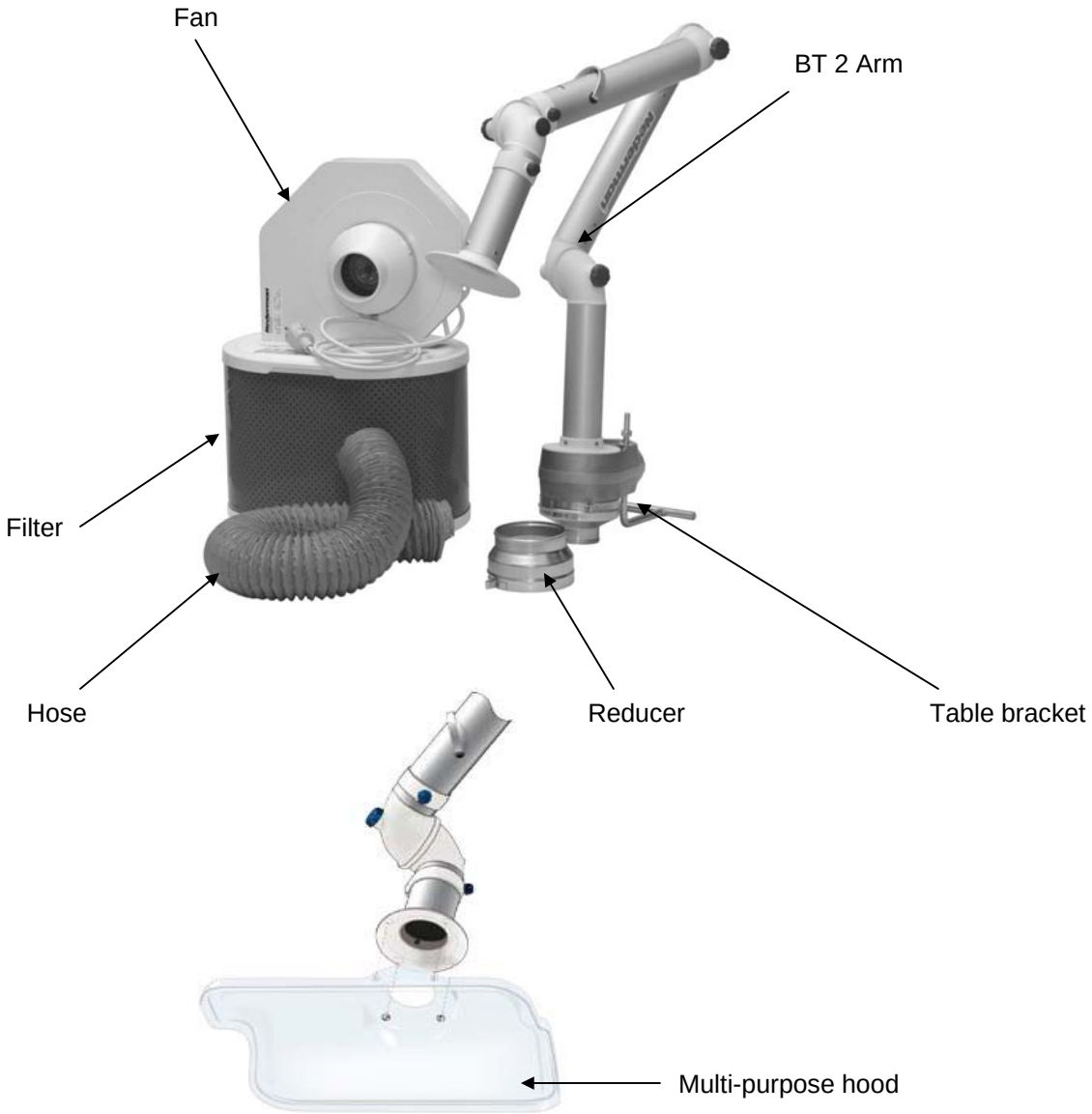

Nederman
IMPROVING YOUR WORKSPACE
39115 Warren
Westland, Michigan
Telephone: (734) 729-3344
Fax:(734) 729-3358
www.nedermanusa.com

# PERFORMANCE DATA

**Revision: 20070122**

**Extractor Kit 2000**

DATE
PROJECT
LOCATION
ARCH/ENG
REP. NAME

## Airflow vs. Pressure Drop (fan only)

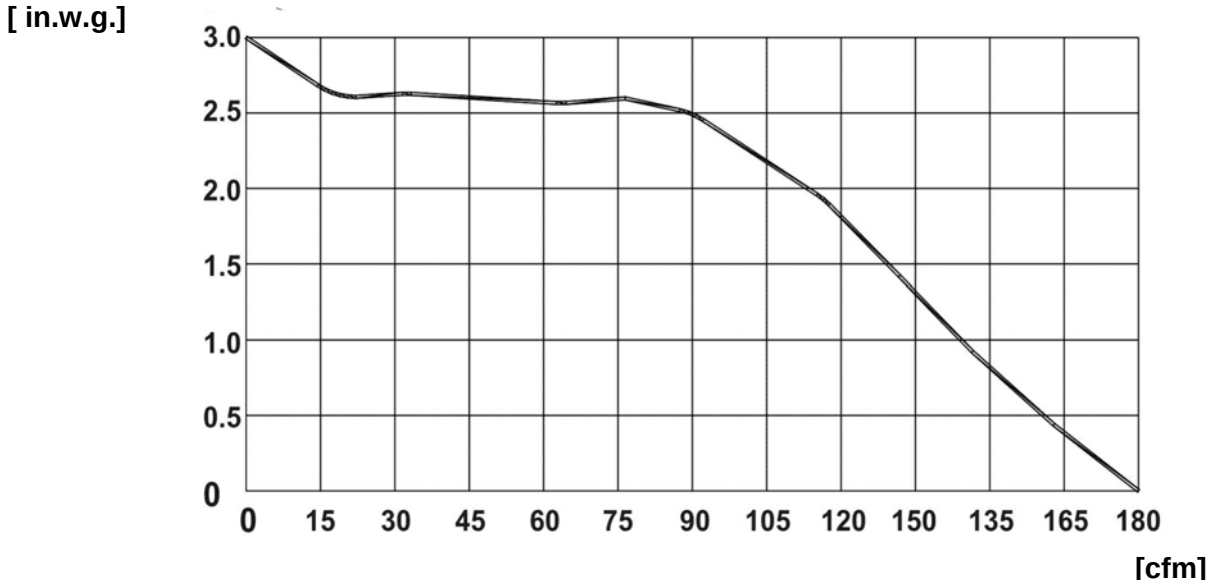


| Description | |
|---|---|
| Airflow at working conditions [cfm] | 88 |
| Power [HP] | 1/5 |
| Voltage [V] | 110 |
| Frequency [Hz] | 60 |
| Filtration efficiency [%] * | ≥ 99.97 |
| Filter area [$ft^2$] | 27 |
| Carbon weight in combined filter [lbs] | 3 |
| Carbon weight in ALL carbon filter [lbs] | 14 |
| Weight (including all components) [lbs] *** | 29 |
| Noise level [db A] ** | 58 |

* @ 0.3 μm DOP.
** According to ISO 6081
*** With combined filter

Nederman
IMPROVING YOUR WORKSPACE

39115 Warren
Westland, Michigan
Telephone: (734) 729-3344
Fax:(734) 729-3358
www.nedermanusa.com

# ACCESSORIES
**Revision: 20070122**

## EK 2000
## Extractor Kit 2000

DATE
PROJECT
LOCATION
ARCH/ENG
REP. NAME

| | Description | Part number |
|---|---|---|
| | **Pre Filter** | **70333007** |
| 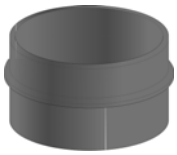 | **Two Filters Coupler** | **70332904** |
| 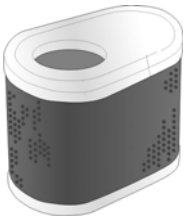 | **All Carbon Filter** | **70312427** |
| | **ESD Silencer Box** | **70311429** |
| | **Metal hood 11"** | **70500444** |

Nederman
IMPROVING YOUR WORKSPACE

39115 Warren
Westland, Michigan
Telephone: (734) 729-3344
Fax:(734) 729-3358
www.nedermanusa.com

# SPARE PARTS

**Revision: 20070205**

DATE

PROJECT

LOCATION

ARCH/ENG

REP. NAME

## Extractor Kit 2000

## Part Number: 70505244

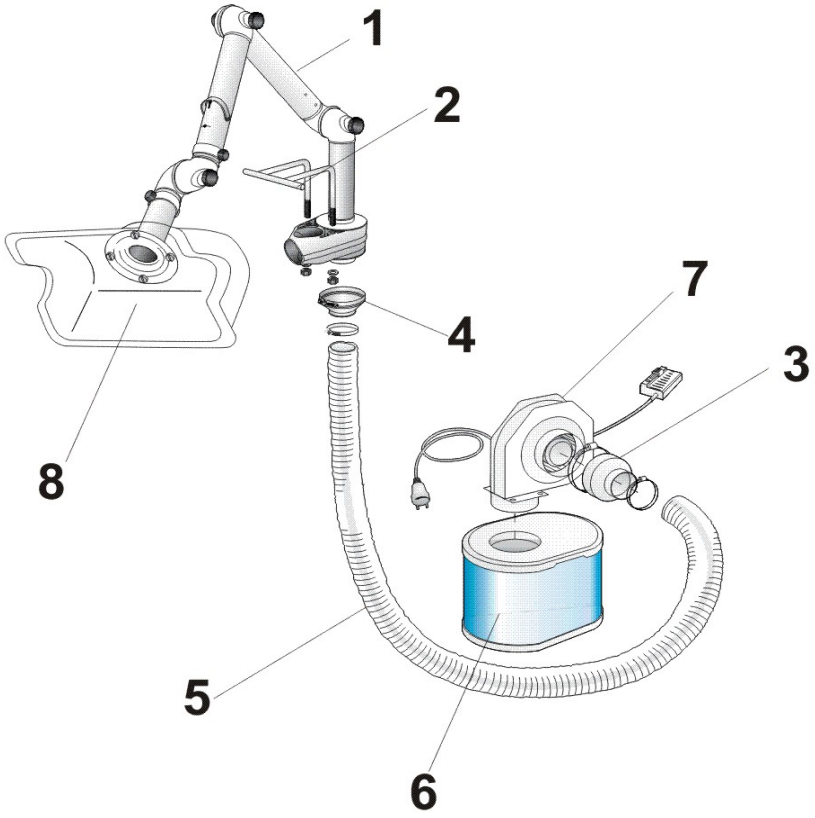


| Detail | Description | Part Number |
|---|---|---|
| 1 | BT2 Arm Standard | 70510244 |
| 2 | Table bracket | 70501444 |
| 3 | Reducer (3" X 5") | 70345401 |
| 4 | Reducer (3" X 4 1/4") | 70500744 |
| 5 | Hose (grey) (3" X 10') | 70501544 |
| 6 | Standard Filter | 70311427 |
| 6 | Carbon Filter | 70312427 |
| 7 | Fan 110V, 112W, 60Hz | 70800334 |
| 8 | Multi-purpose hood (standard) | 70500144 |

Nederman
IMPROVING YOUR WORKSPACE

39115 Warren
Westland, Michigan
Telephone: (734) 729-3344
Fax:(734) 729-3358
www.nedermanusa.com

# TECHNICAL DATA

**Revision: 20070220**

## EK 2000 ESD

## Extractor Kit 2000 ESD

DATE

PROJECT

LOCATION

ARCH/ENG

REP. NAME

**General description:** **The EK 2000 ESD** antistatic is a personalized complete system for the capture at source and filtration of fumes and gases.

The air is filtered through a disposable particle and an activated carbon combined filter.

This filter captures the noxious fumes and gases that occur when soldering, gluing or working with solvents.
It comes with a variable speed controller, which is used to regulate the speed of the fan.

Nederman
IMPROVING YOUR WORKSPACE
39115 Warren
Westland, Michigan
Telephone: (734) 729-3344
Fax:(734) 729-3358
www.nedermanusa.com

# PERFORMANCE DATA

**Revision: 20070122**

**Extractor Kit 2000 ESD**

DATE
PROJECT
LOCATION
ARCH/ENG
REP. NAME

## Airflow vs. Pressure Drop (fan only)

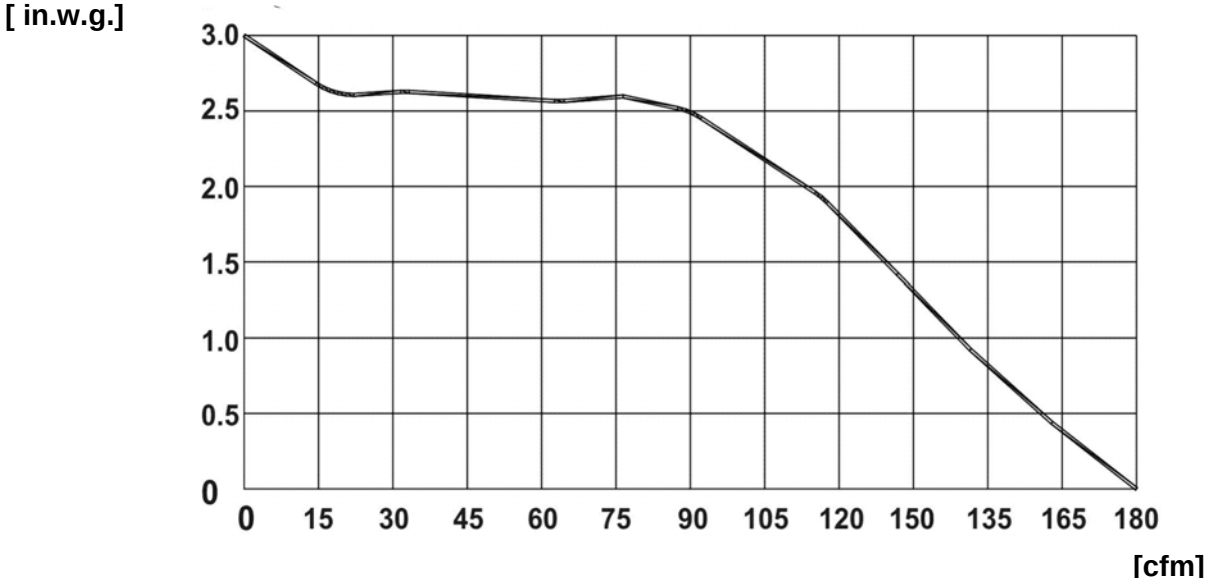


| Description | |
|---|---|
| Airflow at working conditions [cfm] | 88 |
| Power [HP] | 1/5 |
| Voltage [V] | 110 |
| Frequency [Hz] | 60 |
| Filtration efficiency [%] * | ≥ 99.97 |
| Filter area [$ft^2$] | 27 |
| Carbon weight in combined filter [lbs] | 3 |
| Carbon weight in ALL carbon filter [lbs] | 14 |
| Weight (including all components) [lbs] *** | 29 |
| Noise level [db A] ** | 58 |

* @ 0.3 μm DOP.
** According to ISO 6081
*** With combined filter

Nederman
IMPROVING YOUR WORKSPACE

39115 Warren
Westland, Michigan
Telephone: (734) 729-3344
Fax:(734) 729-3358
www.nedermanusa.com

# ACCESSORIES

**Revision: 20070220**

## EK 2000 ESD
## Extractor Kit 2000 ESD

DATE

PROJECT

LOCATION

ARCH/ENG

REP. NAME

| | Description | Part number |
|---|---|---|
| | **Pre Filter** | **70333007** |
| 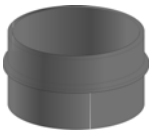 | **Two Filters Coupler** | **70332904** |
| 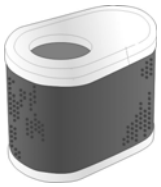 | **All Carbon Filter** | **70312427** |
| | **ESD Silencer Box** | **70311429** |
| | **Metal hood ESD** | **70500544** |

| | | |
|---|---|---|
| Nederman<br>IMPROVING YOUR WORKSPACE<br><br>39115 Warren<br>Westland, Michigan<br>Telephone: (734) 729-3344<br>Fax:(734) 729-3358<br>www.nedermanusa.com | SPARE PARTS<br>**Revision: 20070226** | DATE<br>PROJECT<br>LOCATION |
| | **Extractor Kit 2000 ESD**<br>**Part Number: 70505544** | ARCH/ENG<br>REP. NAME |

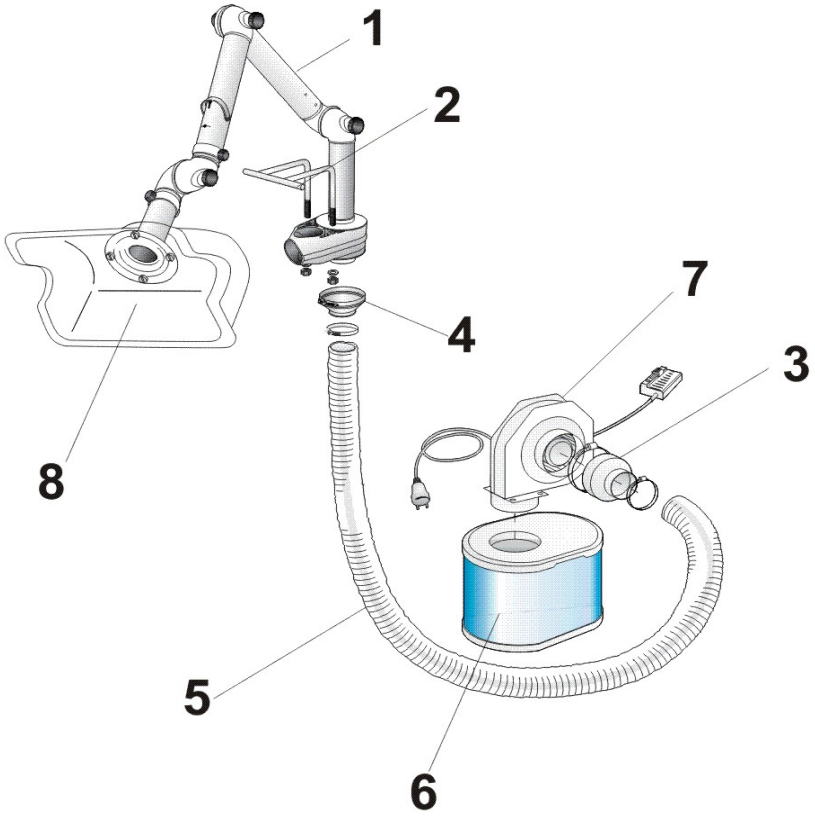


| Detail | Description | Part Number |
|---|---|---|
| 1 | BT2 Arm , ESD, 2" x 44" | 70530244 |
| 2 | Table bracket | 70501444 |
| 3 | Reducer (3" X 5") ESD black | 14341080 |
| 4 | Reducer (3" X 4 1/4") | 70500744 |
| 5 | Hose (3" X 10') ESD black | 70501944 |
| 6 | Standard Filter | 70311427 |
| 6 | Carbon Filter | 70312427 |
| 7 | Fan 110V, 112W, 60Hz | 70800334 |
| 8 | Multi-purpose hood ESD | 70500244 |

# Tab 9

Nederman
IMPROVING YOUR WORKSPACE

39115 Warren
Westland, Michigan
Telephone: (734) 729-3344
Fax:(734) 729-3358
www.nedermanusa.com

# TECHNICAL DATA

**Revision: 20070208**

| | |
|---|---|
| DATE | |
| PROJECT | |
| LOCATION | |
| ARCH/ENG | |
| REP. NAME | |

## EK 2500

## Extractor Kit 2500

**General description:** The EK 2500 is a flexible system for the capture of noxious fumes and gases that normally occur when soldering, gluing, and working with solvents.

The two arms are made of an anodized aluminum and have three adjustable joints.

The arms are easy to adjust to get close to the source.

Correct airflow can easily be set with the help of the speed controller to suit different applications.

The arms can be used independently from each other, due to the variable speed of the fan and the damper in each arm.

Nederman
IMPROVING YOUR WORKSPACE
39115 Warren
Westland, Michigan
Telephone: (734) 729-3344
Fax:(734) 729-3358
www.nedermanusa.com

# PERFORMANCE DATA

**Revision: 20070208**

**Extractor Kit 2500**

DATE
PROJECT
LOCATION
ARCH/ENG
REP. NAME

## Airflow vs. Pressure Drop (fan only)

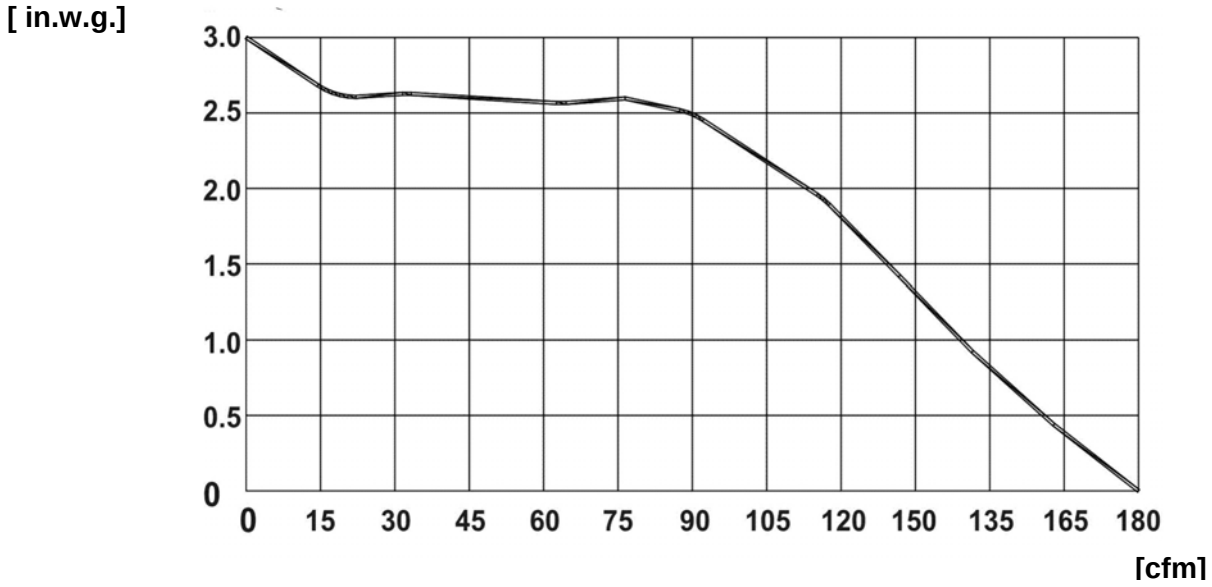


| Description | |
|---|---|
| Airflow at working conditions [cfm] (44 X 2) | 88 |
| Power [HP] | 1/5 |
| Voltage [V] | 110 |
| Frequency [Hz] | 60 |
| Filtration efficiency [%] * | ≥ 99.97 |
| Filter area [$ft^2$] | 27 |
| Carbon weight in combined filter [lbs] | 3 |
| Carbon weight in ALL carbon filter [lbs] | 14 |
| Weight (including all components) [lbs] *** | 29 |
| Noise level [db A] ** | 58 |

* @ 0.3 μm DOP.
** According to ISO 6081
*** With combined filter

Nederman
IMPROVING YOUR WORKSPACE

39115 Warren
Westland, Michigan
Telephone: (734) 729-3344
Fax:(734) 729-3358
www.nedermanusa.com

# ACCESSORIES

**Revision: 20070208**

## EK 2500
## Extractor Kit 2500

DATE

PROJECT

LOCATION

ARCH/ENG

REP. NAME

| | Description | Part number |
|---|---|---|
| | **Pre Filter** | **70333007** |
| 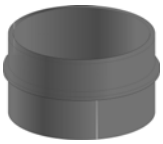 | **Two Filters Coupler** | **70332904** |
| 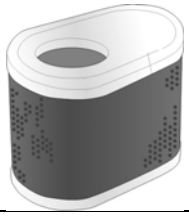 | **All Carbon Filter** | **70312427** |
| | **ESD Silencer Box** | **70311429** |
| 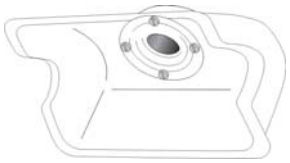 | **Multi purpose hood** | **70500144** |
| | **Metal hood 11"** | **70500444** |

Nederman
IMPROVING YOUR WORKSPACE

39115 Warren
Westland, Michigan
Telephone: (734) 729-3344
Fax:(734) 729-3358
www.nedermanusa.com

# SPARE PARTS

**Revision: 20070208**

DATE

PROJECT

LOCATION

ARCH/ENG

REP. NAME

## Extractor Kit 2500

## Part Number: 70505844

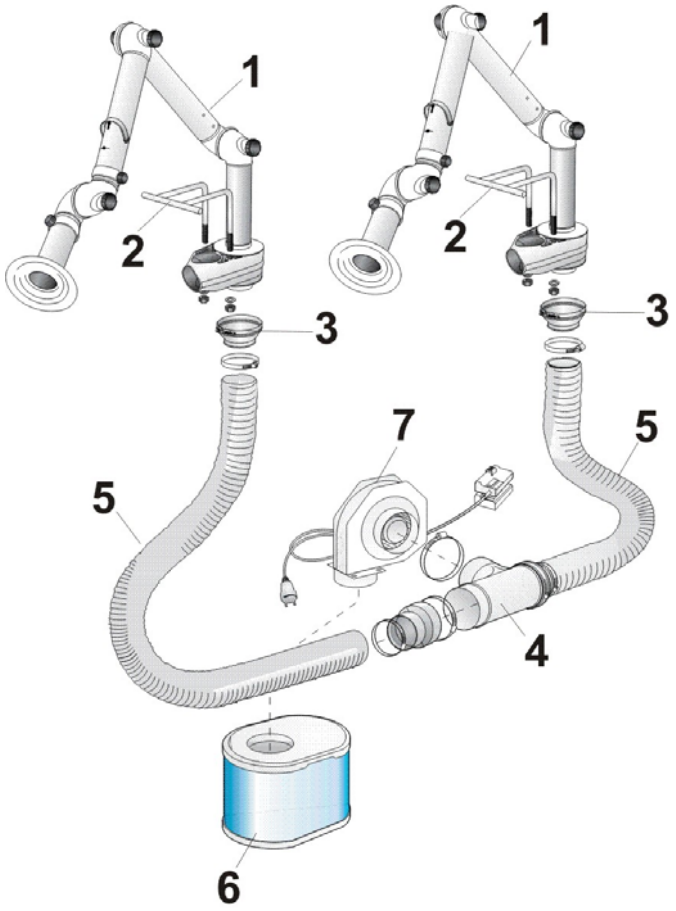


| Detail | Description | Part Number |
|---|---|---|
| 1 | BT2 Arm Standard (2"x44") | 70510244 |
| 2 | Table bracket | 70501444 |
| 3 | Reducer (3" X 3 1/4") | 70500744 |
| 4 | T connection 1x 5 "to 2" x3" | 70500926 |
| 5 | Hose (grey) (3" X 10') | 70501544 |
| 6 | Standard Filter | 70311427 |
| 6 | Carbon Filter | 70312427 |
| 7 | Fan 110V, 112W, 60Hz | 70800334 |

Nederman
IMPROVING YOUR WORKSPACE

39115 Warren
Westland, Michigan
Telephone: (734) 729-3344
Fax:(734) 729-3358
www.nedermanusa.com

# TECHNICAL DATA

**Revision: 20070221**

| | |
|---|---|
| DATE | |
| PROJECT | |
| LOCATION | |
| ARCH/ENG | |
| REP. NAME | |

## EK 2500 ESD

## Extractor Kit 2500 ESD

**General description:** **The EK 2500 ESD** antistatic is a flexible system for the capture of noxious fumes and gases that normally occur when soldering, gluing, and working with solvents.

The two arms are made of an anodized aluminum and have three adjustable joints.

The arms are easy to adjust to get close to the source.

Correct airflow can easily be set with the help of the speed controller to suit different applications.

The arms can be used independently from each other, due to the variable speed of the fan and the damper in each arm.

Nederman
IMPROVING YOUR WORKSPACE
39115 Warren
Westland, Michigan
Telephone: (734) 729-3344
Fax:(734) 729-3358
www.nedermanusa.com

# PERFORMANCE DATA

**Revision: 20070221**

**Extractor Kit 2500 ESD**

DATE
PROJECT
LOCATION
ARCH/ENG
REP. NAME

## Airflow vs. Pressure Drop (fan only)

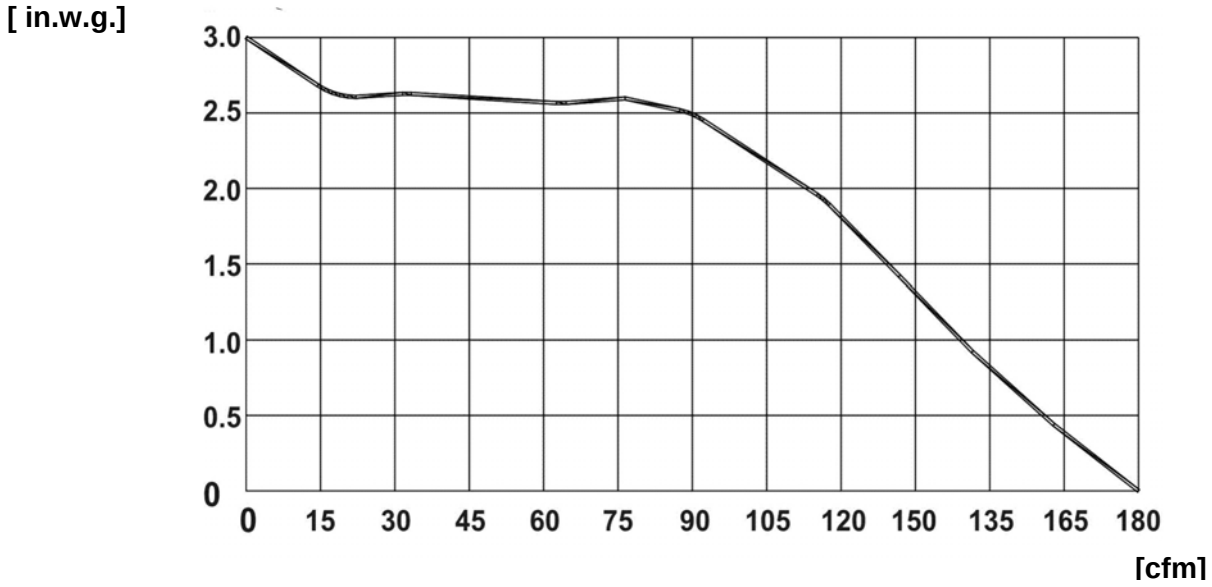


| Description | |
|---|---|
| Airflow at working conditions [cfm] (44 X 2) | 88 |
| Power [HP] | 1/5 |
| Voltage [V] | 110 |
| Frequency [Hz] | 60 |
| Filtration efficiency [%] * | ≥ 99.97 |
| Filter area [$ft^2$] | 27 |
| Carbon weight in combined filter [lbs] | 3 |
| Carbon weight in ALL carbon filter [lbs] | 14 |
| Weight (including all components) [lbs] *** | 29 |
| Noise level [db A] ** | 58 |

* @ 0.3 μm DOP.
** According to ISO 6081
*** With combined filter

Nederman
IMPROVING YOUR WORKSPACE

39115 Warren
Westland, Michigan
Telephone: (734) 729-3344
Fax:(734) 729-3358
www.nedermanusa.com

# ACCESSORIES

**Revision: 20070221**

## EK 2500 ESD
## Extractor Kit 2500 ESD

DATE

PROJECT

LOCATION

ARCH/ENG

REP. NAME

| | Description | Part number |
|---|---|---|
| | **Pre Filter** | **70333007** |
| 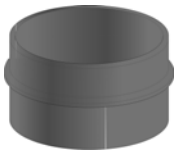 | **Two Filters Coupler** | **70332904** |
| 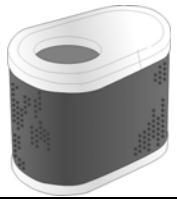 | **All Carbon Filter** | **70312427** |
| | **ESD Silencer Box** | **70311429** |
| | **Multi purpose hood ESD** | **70500244** |
| | **Metal hood** | **70500544** |

Nederman
IMPROVING YOUR WORKSPACE

39115 Warren
Westland, Michigan
Telephone: (734) 729-3344
Fax:(734) 729-3358
www.nedermanusa.com

# SPARE PARTS

**Revision: 20070221**

DATE

PROJECT

LOCATION

ARCH/ENG

REP. NAME

## Extractor Kit 2500 ESD

## Part Number: 70506144

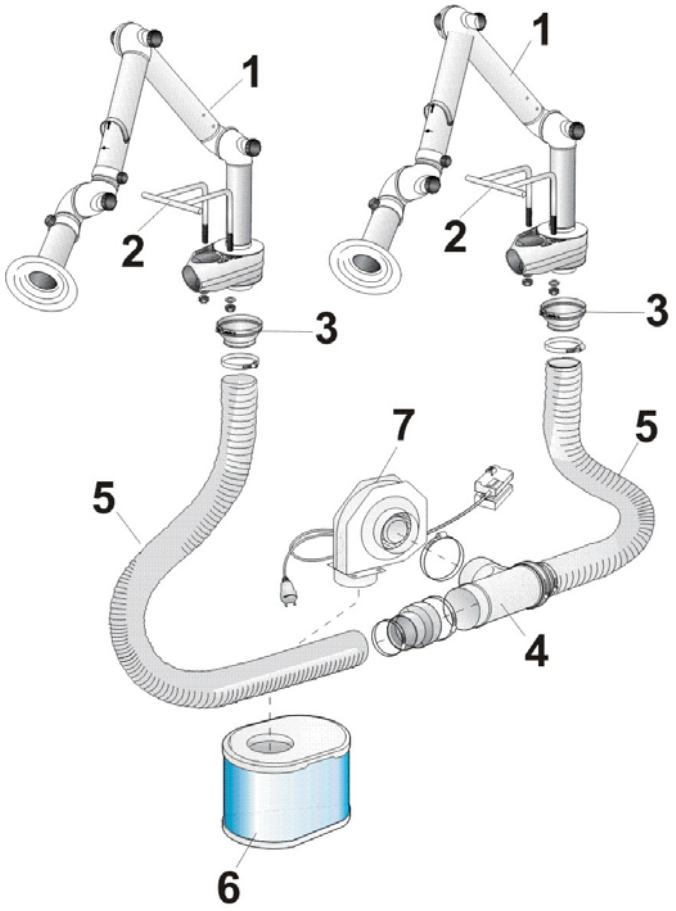


| Detail | Description | Part Number |
|---|---|---|
| 1 | BT2 Arm ESD (2"x44") | 70530244 |
| 2 | Table bracket | 70501444 |
| 3 | Reducer (3" X 3 1/4") | 70500744 |
| 4 | T connection 1x 5 "to 2" x 3" ESD | 70500529 |
| 5 | Hose (3" X 10') ESD Black | 70501944 |
| 6 | Standard Filter | 70311427 |
| 6 | Carbon Filter | 70312427 |
| 7 | Fan 110V, 112W, 60Hz | 70800334 |

# Tab 10

Nederman
IMPROVING YOUR WORKSPACE

39115 Warren
Westland, Michigan
Telephone: (734) 729-3344
Fax:(734) 729-3358
www.nedermanusa.com

# TECHNICAL DATA

**Revision: 20070208**

| | |
|---|---|
| DATE | |
| PROJECT | |
| LOCATION | |
| ARCH/ENG | |
| REP. NAME | |

## EK 3000

## Extractor Kit 3000

**General description:** The EK 3000 is a personalized complete system for the capture at source and filtration of fumes and gases.

The air is filtered through a disposable particle and an activated carbon combined filter.

This filter captures the noxious fumes and gases that occur when soldering, gluing or working with solvents.
It comes with a variable speed controller, which is used to regulate the speed of the fan.

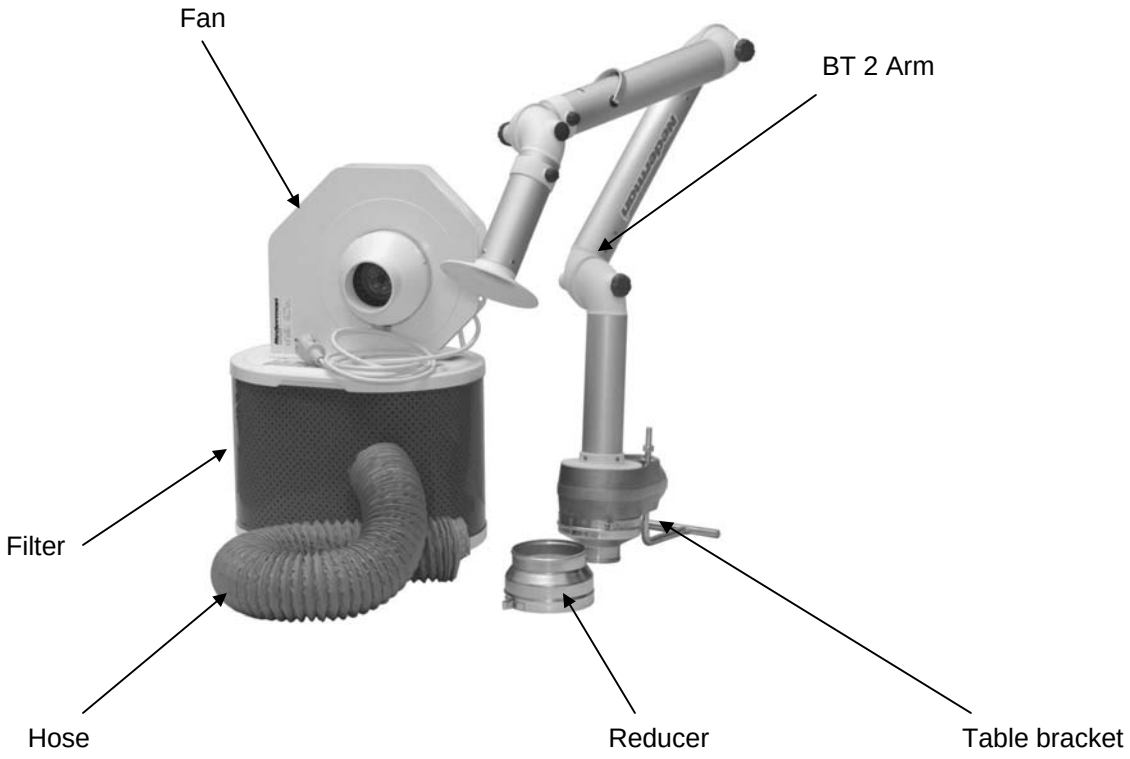

Nederman
IMPROVING YOUR WORKSPACE
39115 Warren
Westland, Michigan
Telephone: (734) 729-3344
Fax:(734) 729-3358
www.nedermanusa.com

# PERFORMANCE DATA

**Revision: 200700208**

**Extractor Kit 3000**

| | |
|---|---|
| DATE | |
| PROJECT | |
| LOCATION | |
| ARCH/ENG | |
| REP. NAME | |

## Airflow vs. Pressure Drop (fan only)

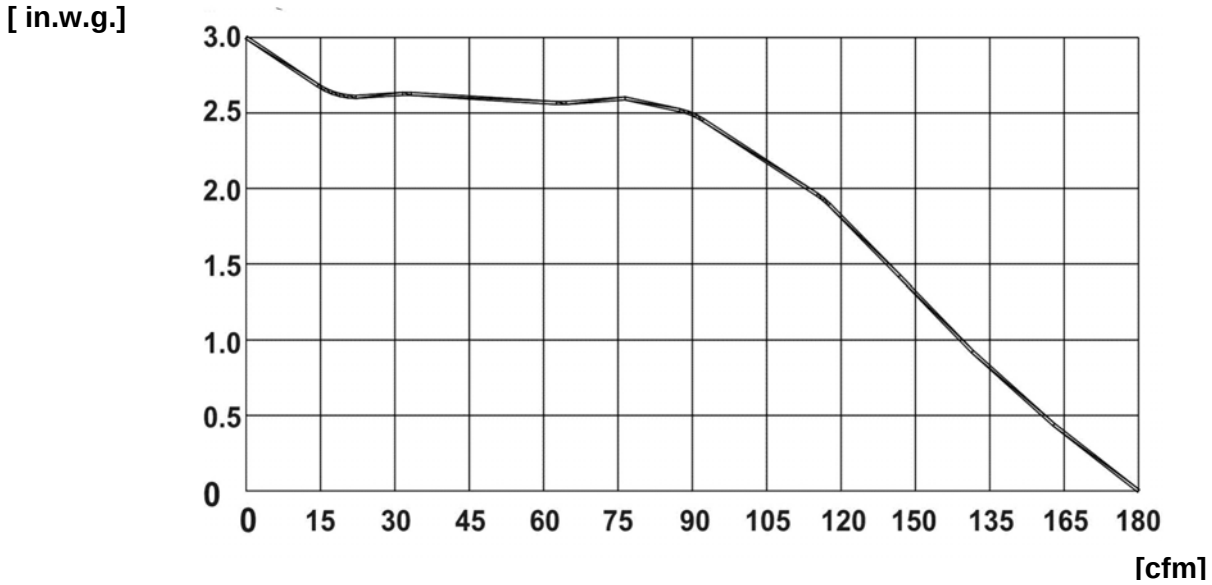


| Description | |
|---|---|
| Airflow at working conditions [cfm] | 88 |
| Power [HP] | 1/5 |
| Voltage [V] | 110 |
| Frequency [Hz] | 60 |
| Filtration efficiency [%] * | ≥ 99.97 |
| Filter area [$ft^2$] | 27 |
| Carbon weight in combined filter [lbs] | 3 |
| Carbon weight in ALL carbon filter [lbs] | 14 |
| Weight (including all components) [lbs] *** | 29 |
| Noise level [db A] ** | 58 |

* @ 0.3 μm DOP.
** According to ISO 6081
*** With combined filter

Nederman
IMPROVING YOUR WORKSPACE

39115 Warren
Westland, Michigan
Telephone: (734) 729-3344
Fax:(734) 729-3358
www.nedermanusa.com

# ACCESSORIES

**Revision: 20070208**

**EK 3000**
**Extractor Kit 3000**

DATE
PROJECT
LOCATION
ARCH/ENG
REP. NAME

| | Description | Part number |
|---|---|---|
| | **Pre Filter** | **70333007** |
| 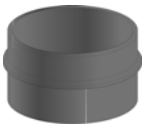 | **Two Filters Coupler** | **70332904** |
| 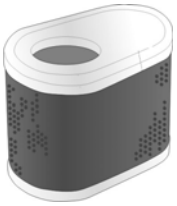 | **All Carbon Filter** | **70312427** |
| | **ESD Silencer Box** | **70311429** |
| | **Multi purpose hood** | **70500144** |
| | **Metal hood 11"** | **70500444** |

Nederman
IMPROVING YOUR WORKSPACE

39115 Warren
Westland, Michigan
Telephone: (734) 729-3344
Fax:(734) 729-3358
www.nedermanusa.com

# SPARE PARTS

**Revision: 20070208**

DATE

PROJECT

LOCATION

ARCH/ENG

REP. NAME

## Extractor Kit 3000

## Part Number: 70506444

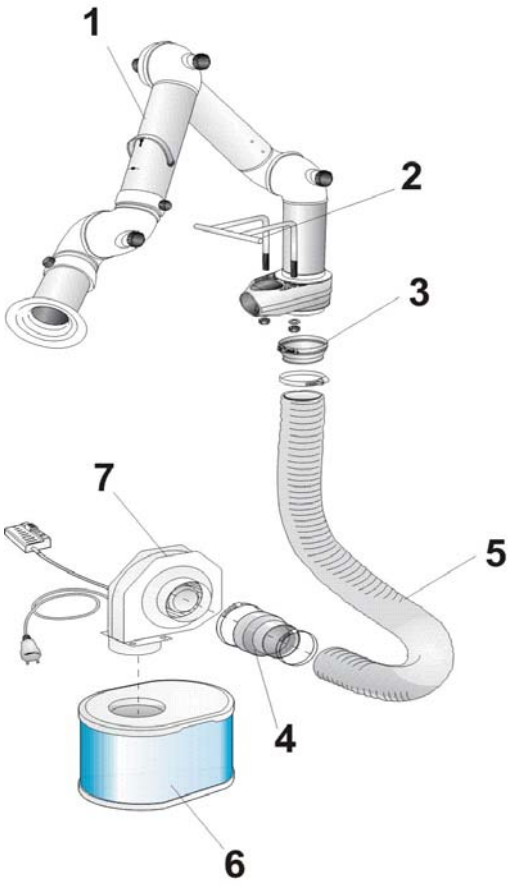


| Detail | Description | Part Number |
|---|---|---|
| 1 | BT2 Arm Standard (3" x 44") | 70540144 |
| 2 | Table bracket | 70501444 |
| 3 | Reducer (4" X 4 1/4") | 70500844 |
| 4 | Reducer (4"X 5") | 70341077 |
| 5 | Hose (grey) (4" X 10') | 70501744 |
| 6 | Standard Filter | 70311427 |
| 6 | Carbon Filter | 70312427 |
| 7 | Fan 110V, 112W, 60Hz | 70800334 |

Nederman
IMPROVING YOUR WORKSPACE

39115 Warren
Westland, Michigan
Telephone: (734) 729-3344
Fax:(734) 729-3358
www.nedermanusa.com

# TECHNICAL DATA

**Revision: 20070221**

| | |
|---|---|
| DATE | |
| PROJECT | |
| LOCATION | |
| ARCH/ENG | |
| REP. NAME | |

## EK 3000 ESD

## Extractor Kit 3000 ESD

**General description:** **The EK 3000 ESD** antistatic is a personalized complete system for the capture at source and filtration of fumes and gases.

The air is filtered through a disposable particle and an activated carbon combined filter.

This filter captures the noxious fumes and gases that occur when soldering, gluing or working with solvents.
It comes with a variable speed controller, which is used to regulate the speed of the fan.

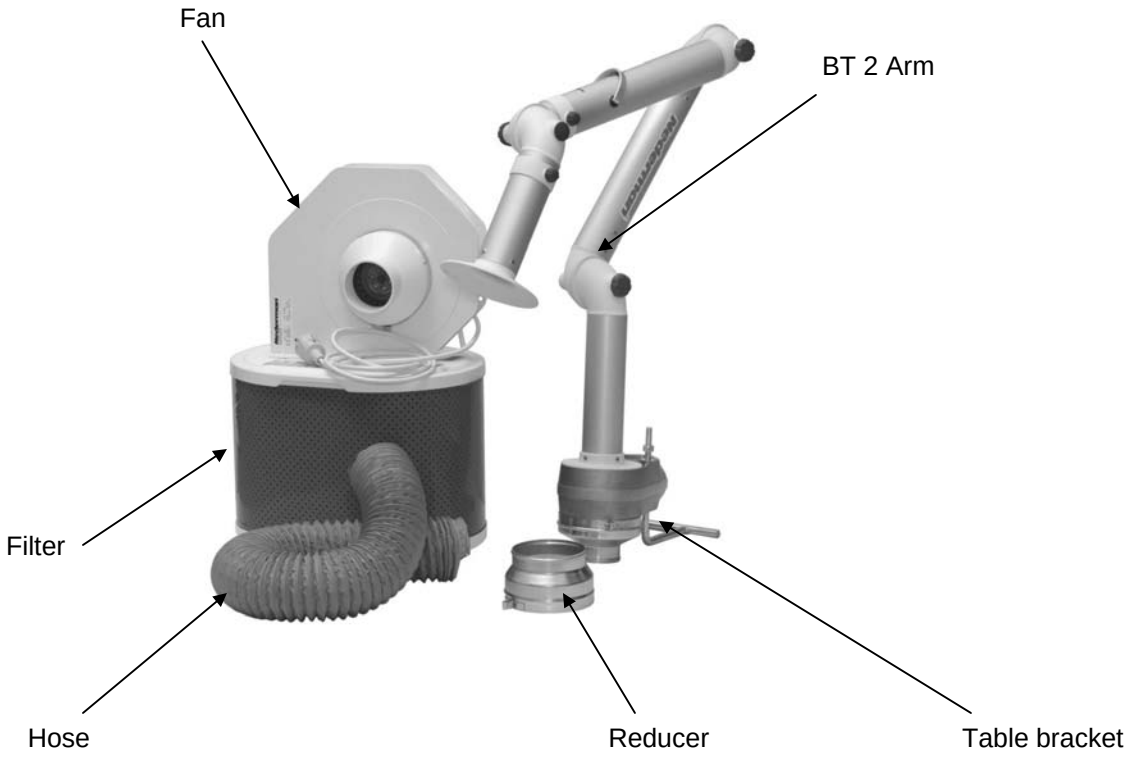

Nederman
IMPROVING YOUR WORKSPACE
39115 Warren
Westland, Michigan
Telephone: (734) 729-3344
Fax:(734) 729-3358
www.nedermanusa.com

# PERFORMANCE DATA

**Revision: 200700221**

DATE

PROJECT

LOCATION

## Extractor Kit 3000 ESD

ARCH/ENG

REP. NAME

## Airflow vs. Pressure Drop (fan only)

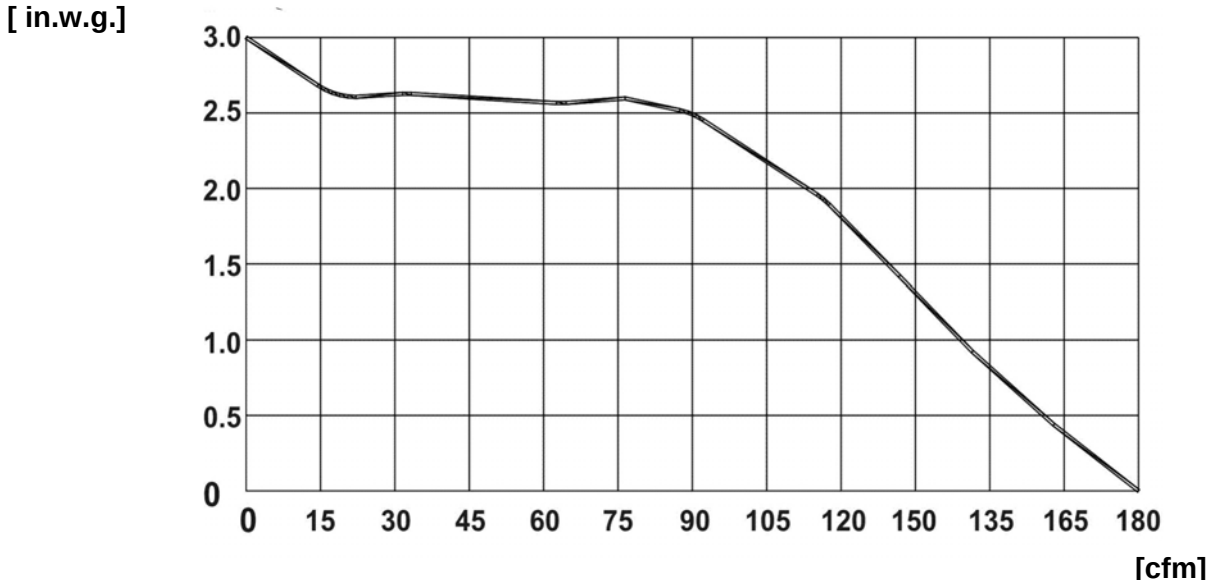


| Description | |
|---|---|
| Airflow at working conditions [cfm] | 88 |
| Power [HP] | 1/5 |
| Voltage [V] | 110 |
| Frequency [Hz] | 60 |
| Filtration efficiency [%] * | ≥ 99.97 |
| Filter area [$ft^2$] | 27 |
| Carbon weight in combined filter [lbs] | 3 |
| Carbon weight in ALL carbon filter [lbs] | 14 |
| Weight (including all components) [lbs] *** | 29 |
| Noise level [db A] ** | 58 |

* @ 0.3 μm DOP.
** According to ISO 6081
*** With combined filter

Nederman
IMPROVING YOUR WORKSPACE

39115 Warren
Westland, Michigan
Telephone: (734) 729-3344
Fax:(734) 729-3358
www.nedermanusa.com

# ACCESSORIES

**Revision: 20070221**

## EK 3000 ESD
## Extractor Kit 3000 ESD

DATE

PROJECT

LOCATION

ARCH/ENG

REP. NAME

| | Description | Part number |
|---|---|---|
| | **Pre Filter** | **70333007** |
| 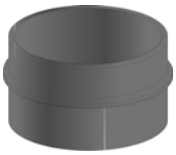 | **Two Filters Coupler** | **70332904** |
| 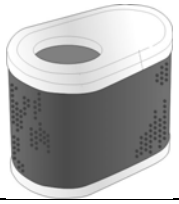 | **All Carbon Filter** | **70312427** |
| | **ESD Silencer Box** | **70311429** |
| | **Multi purpose hood ESD** | **70500244** |
| | **Metal hood ESD, 10"** | **70500544** |

Nederman
IMPROVING YOUR WORKSPACE

39115 Warren
Westland, Michigan
Telephone: (734) 729-3344
Fax:(734) 729-3358
www.nedermanusa.com

# SPARE PARTS

**Revision: 20070221**

DATE

PROJECT

LOCATION

ARCH/ENG

REP. NAME

## Extractor Kit 3000 ESD

## Part Number: 70506744

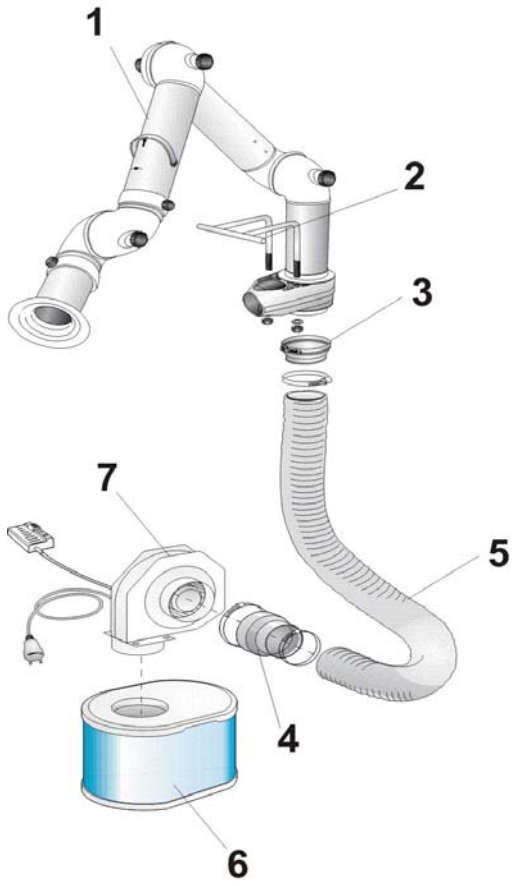


| Detail | Description | Part Number |
|---|---|---|
| 1 | BT2 Arm ESD (3" x 44") | 70560144 |
| 2 | Table bracket | 70501444 |
| 3 | Reducer (4" X 4 1/4") | 70500844 |
| 4 | Reducer (4"X 5") | 70341077 |
| 5 | Hose (black) (4" X 10') ESD | 70502144 |
| 6 | Standard Filter | 70311427 |
| 6 | Carbon Filter | 70312427 |
| 7 | Fan 110V, 112W, 60Hz | 70800334 |